M.SSI~
121-122

AMENDMENTS

TO

THE

INDIAN

BOILER

REGULATIONS,

1950.

(1.3.1969 to 31.12.1988)

Regulation No.2.

(i) For clause (dd), the following shall be substituted, namely :-

"(dd) "Competent Authority" means an authority recognised by the Central Boilers Board in the manner as laid down in regulation 4A to 4H, as competent to issue certificates to welders for the purposes of regulation 4(b) (ii) and regulation 605;";

(ii) After clause (e), the following shall be inserted, namely :-

"(ee) "Evaluation Committee" means a committee constituted by the Central Government consisting of,-

(a) Technical Adviser (Boilers)	..	Chairman
(b) Chief Inspector (Boilers) of the State where the unit is located.	..	Member
(c) a representative of the manufacturers of boilers/ ancillaries in public sector.	..	Member.".

(iii) For clause (g), the following shall be substituted, namely :-

"(g) "Inspecting Authority" means an authority recognised by the Central Boilers Board in the manner as laid down in regulations 4A to 4H, as competent to grant a certificate in Form IIA or IIB;";

(iv) In clause (h) after sub clause (ii), the following sub-clause shall be inserted, namely :-

"(iii) in respect of:

(a) Approval of drawings of boilers or parts thereto with minor changes, where necessary, except for the drawings of the first set of boilers or parts thereto;

(b) Inspection at stages of manufacture including examination of repaires;

(c) Signing and issue of certificates in the relevant forms except for the Certificates of the first set of boilers or parts thereto;

an officer acting on behalf of an Inspecting Authority.

(v) After clause (h) the following shall be inserted, namely :-

"(hh) "Liaison Sub-Committee" means a committee constituted by the Central Boilers Board under bye-law 3(1) (e) of the Bye-Laws of the Central Boilers Board";

(vi) After clause (m), the following shall be inserted, namely:-

"(n) "Technical Adviser (Boilers)" means Technical Adviser (Boilers) to the Government of India in the Ministry of Industry (Department of Industrial Development);".

Regulation No.3.

(i) After clause (3) of regulation 3, the following shall be inserted, namely:-

"(4) Where no provision is made in these regulations for design or manufacture of any pressure part the Board may permit the design, manufacture, stage inspections and certification of such pressure parts including the valves mountings and fittings conforming to the Codes or standards like B.S., ASME Boiler and Pressure Vessel Code, TEMA, TRD, GOST and JIS, which are known to be commonly used in industrially advanced countries.".

"(5) Notwithstanding anything contained in these regulations, the Inspecting Authority may approve, inspect and issue certificates when the material used in the construction of a boiler, steam-pipe, economiser, super-heater or other pressure part is not in conformity with these regulations, but is in conformity with I.S.O. Boiler Code, ISO/R-831.

(6) Notwithstanding anything contained in these regulations, the Inspecting Authority may accept the design or constructional features of a boiler, steam-pipe, economiser, super-heater or other pressure part which is not in conformity with these regulations, but is in conformity with the I.S.O.Boiler Code I.S.O./R-831.".

(7) Notwithstanding anything contained in sub-regulation (1), and subject to the provision of regulation 7 and 8, the Chief Inspector of Boilers may register a boiler, and order the issue of a certificate authorising the use thereof, under any of the following circumstances, namely:-

(i) When the material intended to be used in the construction of a boiler, steam-pipe, economiser, super-heater or other pressure part is not in conformity with these regulations, but is in conformity with I.S.O. Boiler Code, I.S.O./R-831.

(ii) When the design and constructional features of a boiler, steam pipe, economiser, super-heater or other pressure part is not in conformity with these regulations, but is in conformity with I.S.O. Boiler Code, I.S.O./R-831".

(iii) After regulation 3, the following regulation shall be added, namely :-

"3A. Inspection of boiler to comply into any foreign code:- Not withstanding anything contained in these regulations, the Inspecting Authority may inspect any boiler meant for export during the various stages of its construction so as to comply with the requirements of any foreign code and may grant a certificate in Form II-A.".

Regulation No.4.

(i) In sub-clause (i) of clause (c), the following shall be inserted at the end, namely :-

"In case of waste Heat Boilers, a certificate in Form II may be issued by the Inspecting Authority of the State, where the boiler is installed, after completion of construction at site on the strength of the certificate supplied to him in prescribed forms by the owner for the individual components of the boilers. For this purpose, the drawings and documents which are required to be furnished for registration of a boiler under regulation 4(c), shall be submitted to the Inspecting Authority of the State, where the boiler is installed, before the commencement of construction of such boiler at the site".

(ii) After sub-clause (i) of clause (c), the following note shall be added at the end, namely :-

"Note.-In liet of Form II, a certificate in Form II-B may be granted by the Inspecting Authority for boilers for which variations from the standard conditions in raspect of material, design and construction features have been permitted by the Board or the Inspecting Authority under sub-regulation (5) or sub-regulation (6) of regulation 3".

(iii) For paragraph 3 of sub-clause of (iv) of clause (c), the following shall be substituted, namely:-

"In the case of steel made and tested by well-known steel makers recognised by the Central Boilers Board in the manner as laid down in regulations 4A to 4H and listed in Appendix G, the certificate of well known steel maker in form IV or certificate of manufacture and test of well known tube/pipe makers recognised by the Central Boilers Board in the manner a s laid down in regulation 4A to 4H, listed in Appendix M, in Form IIIA or IIIB, as the case may be, as prescribed in regulation 26, may be accepted in lieu of a certificate from an Inspecting Authority in so far as it relates to testing of steel as specified in Form II.".

(iv) For paragraph 4 of sub-clause (iv) of clause (c), the following shall be substituted, namely :-

"In case where certificate in Form IV is not producible

owing to such certificate containing details of plates used for other purpose, also, all the relevant information in respect of the boiler furnished in Form IV-A duly signed by the Makers of the boiler and countersigned by the Inspecting Authority, shall be acceptable in lieu of the certificate in Form IV. Original steel maker's certificate of manufacture and results of tests shall be produced to the Chief Inspector on demand".

(v) After sub-clause (vi) of clause (c), the following note shall be inserted, namely :-

NOTE:-Unit 33,000 hours tests are carried out by National Metallurgical Laboratory or Corporate Research & Development Laboratory of Bharat Heavy Electricals Limited for Collecting elevated temperature data of alloy steel produced indigenously against ASME or BS Grades, these grades of steel may be accepted and long time elevated temperature properties/maximum allowable stress values given in ASME code Or BS, as the case may be, may be used for the purpose of design provided:

(a) A certificate is furnished by the producer of the steel to the effect that the steel has been manufactured strictly in accordance with the technical requirements of the ASME Code or BS to assure that the creep rupture requirements are complied with.

(b) The Steel make furnishes the necessary certificate that the steel conforms to the chemical analysis, room and elevated temperature mechanical properties given in ASME Code or B.S. as the case may be.

(c) The short-term stress - rupture tests for 10,000 hours as described below are carried out by NML/Steel Plants for the purpose of checking whether the steel is upto the specification and also to ensure that the Steel is capable of meeting the long-term rupture stress values/ maximum allowable stress values given in ASME Code or BS. as the case may be and a certificate is given by NML/ Steel plant to this effect.

(d) A minimum of three casts are tested from each steel manufacturer for each grade of steel.

(e) Each grade of steel is tested at three temperatures and at three stress levels to give rupture lives of 1000, 3000, 10,000 hours at each temperature and taking two specimens under each test condition in conformity with the Code/Specification to which the steel is made.

(f) Concurrently the stress-rupture tests for 33,000 hours duration are taken up on the same three casts from each steel manufacturer for each grade of steel at three tests temperatures and taking two specimens at each temperature.

(vi) After clause (f), the following shall be inserted, namely :-

Note.-In case of tubes made by well known Tube Makers in India or other countries listed in Appendix 'M'

material testing including mechanical tests may be carried out by them and the particulars regarding testing of material including mechanical tests as certified by them shall be noted in the appropriate column or paragraphs in the certificate in Form III-B. In case, certificate from the "Well-known Tube Makers" is produced, such certificate may be accepted in lieu of the certificate from the Inspecting Authority in so far as it relates to testing of material including mechanical tests specified in this form.".

(vii) In clause (g), the existing Note shall be renumbered as Note 1 and after Note 1 as so renumbered, the following Note shall be inserted at the end, namely :-

"Note 2-For the purpose of clause (c), (e), (f) and (g) of this regulations, certificates issued by an authority empowered in this behalf by or under be law in force or national code or standard of any foreign country in respect of plates, bars, tubes, pipes, forgings and castings manufactured in that country and containing the particulars required to be specified in the steel makers certificates referred to in the above mentioned clauses of regulation 4 may be accepted provided such certificates contain a statement duly signed by the Inspecting Authority to the effect that these materials comply with the requirements of the law or the code or standard of the foreign country.";

(viii) After clause (g), the following clauses shall be inserted, namely :-

"(h) Certificates of inspection during construction of pipes for which variation from standard conditions have been permitted,- A Certificate of manufacture and test in Form III-A(1), signed by the maker and be Inspecting Authority shall be furnished.

(i) Certificate of Inspection during construction of tubes for which variation from standard conditions have been permitted,- A certificate of manufacture and test in Form III B(1), signed by the maker and the Inspecting Authority shall be furnished."

(ix) After regulation 4, the following regulations shall be inserted namely :-

"Procedure for recognition of Competent Authority, Inspecting Authority, Well-known Steel Maker, Well-known Foundry/Forge and Well-known Tube/Pipe Maker.-

4A Application for recognition.-

(1) An application for recognition as Competent Authority, Inspecting Authority, Well-known Steel Maker, Well-known Foundry/Forge and Well-known Tube and pipe Maker shall be made by a firm to the Secretary, Central Boilers Board, Ministry of Industry (Department of Industrial Development), New Delhi, for recognition as one of the aforementioned areas of activity in which that firm is engaged.

(2) On receipt of applications under sub-regulation (1), the Secretary, Central Boilers Board shall send a questionnaire in any of the Form (Form XVA to XVE) applicable to the area of activity to the applicant

who shall send the same after duly completed, to the Secretary, Central Boilers Board.

(3) Any firm applying for recognition under sub-regulation (1) shall have a minimum experience of two years in the area of activity for which recognition is applied for.

4B Scrutiny of applications by the Evaluation Committee.-

(1) The Secretary, Central Boilers Board shall send all the applications received under sub-regulation (1) of regulation 4A, along with replies to the questionnaire under sub-regulation (2) of regulation 4A, to the Evaluation Committee.

(2) The Evaluation Committee shall examine all the applications and replies to the Questionnaire under sub-regulation (1) and -

(i) where the application is for recognition as Competent Authority or Inspecting Authority, the Evaluation Committee may, (a) call any of the applicants if it considers necessary, to appear before it to give clarification or additional information that may be required by the said Committee; (b) visit any of the applicant firms on a specific request in writing from such firm to evaluate the performance of the said firm;

(ii) Where the applicants are for recognition as well-known steel maker, well-known foundry/forge and well-known tube and pipe maker, the Evaluation Committee shall inspect the factories of such steel makers, foundry/forge and tube/pipe makers, where the manufacturing activities are being carried out in order to evaluate the performance quality of the product manufactured.

(3) The Evaluation Committee after satisfying itself that the requirements specified in sub-regulations (1) and (2) are fulfilled, shall submit a report along with its recommendations to the Liaison Sub-Committee.

4C. Recognition of a firm as Competent Authority, Inspecting Authorities etc.

(1) The Liaison Sub-Committee shall consider the reports and the recommendations of the Evaluation Committee submitted under sub-regulation (3) of regulation 4B and after examining all the aspects of such report, shall either accord recognition to a firm or refuse recognition to such firm.

(2) In case the Liaison Sub-Committee decides to accord recognition to a firm, a certificate of recognition in one of the Forms(Form XVIA to XVIG) applicable to the area of activity shall be issued by the Secretary Central Boilers Board and in case the Liaison Sub-Committee decides to refuse recognition, it shall inform the applicant in writing giving reasons therefor.

4D. Validity of certificate of recognition. A certificate of recognition issued under regulation 4C, shall be valid for a period of three years.

4E. Renewal of certificate of recognition. Before the expiry of the certificate of recognition of a firm, the firm shall apply for renewal of the certificate to the Secretary, Central Boilers Board who, after following the procedure laid down in the aforementioned regulations, renew the certificate of recognition and such renewal shall be valid for a further period of three years.

4F. Application for registration of existing Competent Authority etc.- All the existing firms recognised as Competent Authority, Inspecting Authority, Well-known Steel Maker, Well-known Foundry/Forge and Well-known Tube and Pipe Maker, shall make an application to the Secretary, Central Boilers Board, within one year from the commencement of the Indian Boiler (4th amendment) Regulations, 1988, and in case no application is made within the time specified the recognition of such firm shall be deemed to have been withdrawn:

Provided that the firm which has been granted recognition and has not completed a period of three years, shall continue to be so recognised as such till the expiry of the period of three years :

Provided further that if an application is not made in time, the same may be entertained by the said authority if the applicant satisfies the authority that there was sufficient cause for not making application in time.

4G. Appeal. (1) Any firm not satisfied with the reasons given by the Liaison Sub-Committee for refusing to accord recognition may file an appeal in writing to the Chairman, Central Boilers Board, for reconsidering its application.

(2) All applications received by Chairman, Central Boilers Board, under sub-regulation (1), shall be decided in the meeting of the Central Boilers Board and the decision of the Board thereon shall be final.

4H. <u>Function of Evaluation Committee.</u>

The Evaluation Committee shall evaluate the performance of a firm applying for recognition in accordance with the provisions of these regulations, in particular, in the following areas, namely :-

(i) Quality System;

(ii) Organisation;

(iii) Review of quality system;

(iv) Documentation -

(a) Inspection and test procedures;

(b) Records;
(c) Technical data;

(v) Inspection equipment;
(vi) Inspection of purchased material or services -
(a) purchasing;
(b) purchasing data;
(c) receiving inspection;
(d) verification of purchased material;
(vii) In-process inspection;
(viii) Workmanship;
(ix) Corrective action;
(x) Inspection and test of completed items;
(xi) Sampling procedure;
(xii) Control of non-conforming material;
(xiii) Indication of inspection status;
(xiv) Protection and preservation of product quality;
(a) material handling;
(b) Storage;
(c) Delivery;
(xv) Training.".

Regulation No.5.

(i) Clause (iv) shall be omitted.

(ii) After regulation 5, the following new regulation shall be inserted, namely :-

"5A. Material not fully indentified;

Where the material as for example plate, bar, billet, pipes and tubes are not covered by mill test certificate either due to misplacement or late receipt of the same but otherwise there are reasons to believe that the materials are genuine and of standard specifications by the Inspecting Authority, the registering authority may permit the use of such materials as a special case after thorough verification test in a Test House to his satisfaction at the rate not less than 25% subject to the following conditions :-

(a) In respect of Plates -
(i) The plates shall have a steel maker's stamp.
(ii) Use of such uncertified plates, however, will not be allowed for manufacture of Shell or Drum of the boiler;
(iii) Shipping documents/order documents shall be made available to establish the specifications of the manufacture for inspection and testing of plates.

(b) For Billets, bars, pipes and tubes -
Shipping documents shall be made available to establish the specifications for manufacture for inspection and testing.".

Regulation No.7.

The following shall be substituted, namely :-

"7. Registration of second-hand boilers :-

(a) For the purpose of registration of a second-hand boiler where all the requisite documents for registration are not furnished, necessary tests including physical, chemical and metallographic test shall be carried out in the National Metallurgical Laboratory, Jamshedpur, the National Physical Laboratory, Delhi, the Central Mechanical Engineering Research Institute, Durgapur, the National Test House, Alipur or Sewri or in any reputed test house and if the results are not satisfactory the boiler shall not be registered.

(b) Where, however, the tests are carried out in a laboratory other than the laboratories mentioned in sub-regulation (a), the tests shall be carried out in the presence of the Chief Inspector or Deputy Chief Inspector or Inspector as may be authorised by the Chief Inspector.

(c) The number of test pieces to be cut out and the location from where test pieces are to be cut for testing shall be decided by the Chief Inspector in individual cases depending on the type and design of a boiler.

(d) Where a test piece is cut out from a second hand boiler and the test is carried out in the laboratories mentioned in sub-regulation (a), or as the case may be, in Sub-regulation (b) a copy of the test report shall be forwarded to the Central Boilers Board by the Chief Inspector of the State concerned.

(e) Where all the requisite documents for registration are not furnished and it is not possible to cut test pieces for conducting necessary tests, as prescribed above, due to design of a boiler, such second-hand boiler shall not be accepted for registration by the Chief Inspector.

(f) When the workmanship of a second hand boiler is in any way doubtful, such percentage of the working pressure of the parts of the boilers, as the Chief Inspector deems fit, shall be reduced".

Regulation No.8.

In clause (b) the Note shall be deleted.

Chapter II - For the heading, the following heading shall be substituted :-

"Steel Plates, Rivets, Section and Bars in Carbon Steel.".

Regulation No.9.

(i) The following regulation shall be substituted, namely :-

"9. Process of manufacture - (a) Steel for plates shall be made by the open hearth, electric furnace or basic oxygen process or any other process which gives steel having equivalent specified properties.

(b) ~~Rimmed~~ General deoxidation practice shall be appropriate to the type of steel used, particularly where the deoxidation practice influences the level of the elevated temperature properties of steel.

(c) Rimmed steels may be permitted only for riveted drums or shells made of plates having a nominal thickness upto 20 mm.

(d) Plates of carbon steel shall conform to one of the following four grades of tensile strength :-

(i) 37 to 45 kgf/mm^2
(ii) 42 to 50 kgf/mm^2
(iii) 47 to 56 kgf/mm^2
(iv) 52 to 62 kgf/mm^2

(ii) After clause (d), the following clause shall be inserted, namely :-

"(e) semi-killed steel may be used for plates in C and C-Mn Steel with an upper limit of the tensile strength not exceeding 56 kg/mm^2 and with thickness not exceeding 50 mm under service temperature condition 0-450°C.".

Regulation No. 10.

(i) For clause (a) the following shall be substituted, namely :-

"(a) The Steel shall not contain more than 0.05 percent of sulphur or phospherus.

(ii) After clause (c) the following clause shall be inserted, namely :-

(d) Plates not intended for hot forming shall be supplied in the normalised conditions unless otherwise agreed upon between the boiler manufacturer and the Inspecting Authority. Normilizing may be omitted if it is demonstrate that equivalent properties can be produced by the rolling subsequent cooling.

NOTE:- The boiler manufacturer may, if he so wishes order a check analysis".

Regulation No. 11.

The following shall be substituted, namely :-

"11. Freedom from defects, etc. Minor surface defects of the plates may be removed by mechanical means to achieve a smooth level surface provided that the minimum specified thickness is maintained. Surface defects may be repaire by welding, only with the approval of the Inspecting Authority provided that the plate is stress relieved after welding where necessary".

Regulation No. 13.

After regulation 13, the following new regulation shall be inserted namely :-

"13A. Where a steel plant is not able to designate steel as IS:2002 because of the fact that they have not been able to carry out all the tests required as per IS 2002, the steel plant may supply steel with a certificate in respect of such of these tests as it has been possible, for them to carry out indicating the tests which it has not been possible for them to conduct in order to get the steel certified as IS:2002. It is open to the manufacturer to take such steel which has the required potentialities of IS: 2002, provided he can

arrange the remaining tests to be conducted at any of the independent testing laboratories, namely, the National Metallurgical Laboratory, Jamshedpur; The Central Mechanical Engineering Research Institute, Durgapur; and the National Test House, Alipur or Sewri provided that samples be drawn in the presence of the Inspecting Authority. Such remaining tests may also be conducted at the Bharat Heavy Electrical Limited, Tiruchirapalli in the presence of the Inspecting Authority in respect of plates intended for their use.

If the certificates of tests from steel makers and the National Metallurgical Laboratory, Jamshedpur, or the Central Mechanical Engineering Research Institute, Durgapur or the National Test House, Alipur or Sewri or Bharat Heavy Electricals Limited, Tiruchirapalli be furnished in the manner mentioned above, the boiler quality plates shall be accepted by the Inspecting Authorities/ Chief Inspector of Boilers of the State".

Regulation No. 15.

The following regulation shall be substituted, namely :-

"15.(a) Tensile Test pieces - The tensile strength and percentage elongation shall be determined from test pieces of guage lengths preferably equal to $L_o = 5.65\sqrt{A_o}$ (See regulation 16). Alternatively, other gauge lengths may be used, provided the elongation is expressed as the equivalent value on a gauge length of $5.65\sqrt{A_o}$.

(b)- In arbitration cases, a test piece of gauge length equal to $5.65\sqrt{A_o}$ for rectangular test piece or 5 do for round test pieces shall be used. For plate thickness exceeding 60mm, test pieces shall be taken from the exteri or third of the plate cross section. Wherever practicable, the rolled surface shall be retained on two opposite sides of the test piece".

Regulation No. 16.

The following regulation shall be substituted, namely :-

"16. Tensile tests (a) The tensile strength of different grades of material shall be within the limits specified in regulation 9 (d).

(b) - The upper yield point at room temperature shall be

not less than 50% of the specified minimum tensile strength at Room temperature.

(c) - The breaking elongation in percentage shall be not less than $\frac{N - Rm}{C}$

Where Rm - Tensile strength at room temperature in kgf/mm^2

N - a quality index of 100 for plate thickness upto 50mm or 95 for plate thickness over 50mm.

C - 2.2 for only gauge lengths of $L=5\ d$ or $L=5.65\sqrt{A_o}$

Where L_o - gauge length

A_o - original cross section of the rectangular test piece.

d_o - original diameter of the round test piece.

NOTE: C = 1.9 for guage lengths of $4\sqrt{A_o}$ for test piece in Appendix B.

(d) - The minimum values of the stress at proof limit 0.2% at elevated temperature (Et) may be calculated by multiplying the minimum specified tensile strength at room temperature (R 20) by the value of the ratio (Et/R20) given in table below)

TABLE

Minimum values for the ratio of the stress at proof limit 0.2% at elevated temperature (Et) to the minimum specified tensile strength at room temperature (R20) of carbon steel boiler plates.

Temperature	250°C	*275°C	300°C	325°C	350°C	375°C
Et/R20	0.40	0.38	0.36	0.34	0.33	0.32
Temperature	400°C	425°C				
Et/R20	0.31	0.30				

*For temperatures lower than 300°C any test required for acceptance purposes (in the absence of records of previous tests at these temperatures) shall be made at 300°C, in which case the proof stress shall be not less than value obtained by calculation from the specified minimum tensile strength at room temperature and the above proof-ratio of 0.36 for 300°C".

Regulation No. 22.

The following paragraph shall be added at the end, namely :-

"If the unsatisfactory result of a test is obviously due to technical conditions of the testing method or to a closely limited defects of a test piece, then the failure can be fit left out of consideration in the decision on the fulfilment of the requirement and another test piece may be substituted. If the unsatisfactory result of test is due to an unfavourable heat treatment the plate and the test strip may be heat treated again. Following this, the entire test shall be repeated".

For the heading above regulation 35, the following heading shall be substituted, namely:-

"Copper, Brass and Steel Tubes"

Regulation No.35.

After sub-regulation (2), the following sub-regulation shall be inserted, namely :-

"(3) Carbon steel tubes - Tubes of Carbon Steel for boilers and super heaters subject to internal or external pressure shall comply with the requirements of regulation 36 to 42, 43 to 46 or 57 to 63, as the case may be".

Regulation No.36.

For clause (a), the following shall be substituted, namely :-

(a) 'Material process:-

The tubes shall be seamless and made of steel produced by an Open Hearth or Electric Process or any of the oxygen processes. The steel shall not contain more than 0.05 percent of sulphur or phosphorus. The manufacturers shall supply a certificate of analysis when required to do so".

Regulation No.38.

The following regulation shall be substituted, namely:-

"38 Tensile strength - (a) The tensile strength of the material cut from finished tubes shall confirm to one of the following five grades namely :-

(1) 31 to 41 kgf/mm^2

(ii) 36 to 46 kgf/mm^2
(iii) 41 to 51 kgf/mm^2
(iv) 46 to 56 kgf/mm^2
(v) 50 to 62 kgf/mm^2

(b) The upper yield point at room temperature shall be not less than 50 percent of the specified minimum tensile strength at room temperature.

(c) The minimum values of the stress at proof limit 0.2 percent at elevated temperature (Et) of the material may be calculated by multiplying the specified minimum tensile strength at room temperature (R20) by the ratio (Et/R20) given in the table below :-

Table: Minimum values for the ratio of the stress at proof limit 0.2 percent at elevated temperature (Et) to the minimum specified tensile strength at room temperature (R20) of carbon steel tubes.

Temperature	250°C	*275°C	300°C	325°C	350°C	375°C
Et/R20	0.40	0.38	0.36	0.34	0.33	0.32
Temperature	400°C	425°C				
Et/R20	0.31	0.30				

*For temperature lower than 300°C any test required for acceptance purposes (in the absence of record of previous tests at the temperatures) shall be made at 300°C, in which case the proof stress shall be not less than the value obtained by calculation from the specified minimum tensile strength at room temperature and the above ration of 0.36 for 300°C.

(d) The breaking elongation in % shall be not less than $\frac{100-Rm}{C}$ where

C= 2.2 for only gauge length of L=5 do or 5.65 $\sqrt{A_o}$
d_o=original diameter of the round test piece.
A_o=original cross section of the rectangular test piece.

NOTE : C=1.9 for gauge lengths of $4\sqrt{A_o}$ or test piece, in Appendix-A.

Regulation No.39.

The following regulation shall be substituted, namely :-

"39. Flattening Test - A ring not less than 50 mm in length cut from one end of each selected tube shall be flattened between two parallel flat surfaces to a distance between the plates (H) as calculated by the formula given below without showing any sign of a crack or flaw.

$$H = \frac{(1 + C)a}{C + \frac{a}{D}}$$

Where, a = thickness of tube (mm)
D = outside diameter of the tube (mm)
C = a constant as given below
C = 0.09 for steel having a specified minimum tensile strength from 31 kgf/mm^2 upto and including 35 kgf/mm^2
C = 0.07 for steel having a specified minimum tensile strength over 35 kgf/mm^2 upto and including 42 kgf/mm^2
C = 0.05 for steel having a specified minimum tensile strength over 42 kgf/mm^2 upto and including 50 kgf/mm^2
C = 0.03 for steel having a specified minimum tensile strength over 50 kgf/mm^2 upto and including 62 kgf/mm^2"

Regulation No.40.

The following regulation shall be substituted, namely :-

"40. Flanging and drift expanding test :- (a) The tube shall withstand either the flanging test or the drift expanding test, at the option of the manufacturer.
(b) Flanging test :- A test piece cut from the end of a tube in a plane perpendicular to the axis of the tube shall show no crack or flaw after flanging to the specified outside diameter as given in the table below.
(c) Drift expanding test :- A test piece cut from the end of a tube in a plane perpendicular to the axis of the

tube shall show no crack after expanding by a mandrel having an included angle of 30°, 45° or 60° at the option of the manufacturer to increase the outside diameter as given in the table below :-

Table:Minimum increase of outside diameter of tubes in flanging and drift expanding test.

Type of test	Minimum specified tensile strength(s)	Outside diameter (D) of the tube	Increase of outside diameter of the tube
	kgf/mm^2	A=D<63.5mm B=63.5≤D≤150mm	%
Flanging test	S<42	A	17
		B	11
	S>42	A	14
		B	8
Drift expanding test		A	17
		B	11

Regulation No.42.

The following regulation shall be substituted, namely :-

"42(i) Hydraulic Test - Each tube shall be tested at the Maker's works on completion of manufacture and shall withstand a hydraulic pressure, to one and half times, the design pressure subject to a minimum of 0.70 kgf/mm^2 but not greater than pressure calculated by the following formula

$$P = \frac{2\ St}{D}$$

Where, P = test pressure
D = outside diameter of the tube
t = nominal wall thickness of the tube
S = stress which shall be taken as 40% of the minimum tensile strength at room temperature.

"(ii) Notwithstanding anything contained in clause (i), the hydraulic test for tubes in Makers' permises may be dispensed with by the Inspecting Authority provided that the tubes are subject to non-destructive testing by an appropriate method like ultrasonic or/and Eddy current testing.".

Regulation No.43.

(i) In clause (a) the words and figures "and the steel produced by the Oxygen process shall in addition not contain more than 0.006 percent of nitrogen" shall be omitted.

(ii) In clause (a) the following shall be added at the end, namely :-

"When the ladle analysis is not available, the analysis of the sample tubes selected at random may be used".

(iii) In clause (d), for sub-clause (i), the following shall be substituted, namely :-

"(i) Diameter. The external diameter of the tubes measured at any point shall be within the following tolerances of diameter specified:-

Outside diameter of tubes	Tolerances
Upto and including 63.5 mm	+0.4 mm -0.8 mm
Over 63.5mm	±1%

Regulation No.44.

For clauses (a),(b) and (c), the following clauses shall be substituted, namely :-

"(a) Tensile strength. (1) The tensile strength of the material cut from finished tubes shall conform to one of the following five grades namely :-

(i) 31 to 41 kgf/mm^2

(ii) 36 to 46 kgf/mm^2

(iii) 41 to 51 kgf/mm^2

(iv) 46 to 56 kgf/mm^2
(v) 50 to 62 kgf/mm^2

The upper yield point at room temperature shall not be less than 50% of the specified minimum tensile strength at room temperature.

(2) The minimum values of the stress at proof limit 0.2% at elevated temperature (Et) of the material may be calculated by multiplying the specified minimum tensile strength at room temperature (R20) by the ratio (Et/R20) given in the table below :-

Table :- Minimum values for the ratio of the stress limit 0.2% at elevated temperature (Et) to a minimum specified tensile strength at room temperature (R20) of carbon steel.

Temperature	*250°C	*275°C	300°C	325°C	350°C	375°C	400°C	425°C
Et/R 20	0.40	0.38	0.36	0.34	0.33	0.32	0.31	0.30

*For temperature lower than 300°C, any test required for acceptance purpose (in the absence of records of previous tests at these temperatures) shall be made at 300°C in which case the proof stress shall be not less than the value obtained by the calculation from the specified minimum tensile strength at room temperature and the above ratio of 0.36 for 300°C.

(3) The breaking elongation in % shall be not less than $\frac{100-Rm}{C}$

Where C = 2.2 for only gauge length of L=5 do or $5.65\sqrt{A_o}$

d_o = original diameter of the round test piece

A_o = original cross section of the rectangular test piece.

NOTE:-C = 1.9 for gauge length of $4\sqrt{A_o}$ for test piece in Appendix - B.

(b) Flattening test - A ring not less than 50 mm in length cut from one end of each selected tube shall be flattened between two parallel flat surfaces to a distance between

the plates (H) as calculated by the formula given below without showing any sign of a crack or flaw.

$$H = \frac{(1+C)a}{C+\frac{a}{D}}$$

Where, a = thickness of the tube (mm)
D = outside diameter of the tube (mm)
C = a constant as given below
C = 0.09 for steel having a specified minimum tensile strength from 31 kgf/mm^2 upto and including 35 kgf/mm^2
C = 0.07 for steel having a specified minimum tensile strength over 35 kgf/mm^2 upto and including 42 kgf/mm^2
C = 0.05 for steel having a specified minimum tensile strength over 42 kgf/mm^2 upto and including 50 kgf/mm^2
C = 0.03 for steel having a specified minimum tensile strength over 50 kgf/mm^2 upto and including 62 kgf/mm^2

(c) Flanging and drift expanding tests:- The tube shall withstand either the flanging test or the drift expanding test, at the option of the manufacturer.

(i) Flanging Test - A test piece cut from the end of the tube in a plane perpendicular to the axis of the tube shall show no crack or flaw after flanging to the specified outside diameter as given in the table below

(ii) Drift expanding test :- A test piece cut from the end of a tube a plane perpendicular to the axis of the tube shall show no crack after expanding by a mandrel having an included angle of 30°,45° or 60° at the option of the manufacture to increase the outside diameter as given in the table below:

Table: Minimum increase of outside diameter of tubes in flanging and drift expanding test.

Type of test	Minimum specified tensile strength(s)	Outside diameter (D) of the tube	Increase of outside diameter of the tube
	Kgf/mm^2	A=D < 63.5mm B=63.5 < D ≤ 150mm	%
	S < 42	A B	17 11

Flanging test	S >42	A B	14 8
Drift expanding test		A B	17 11

Regulation No.46.

The following regulations shall be substituted, namely :-

"46(i) Hydraulic Test - Each tube shall be tested at the Maker's works on completion of manufacture and shall withstand a hydraulic pressure, to one and a half times the design pressure subject to a minimum of 0.70kgf/mm^2 but not greater than the pressure calculated by the following formula.

$$P = \frac{2\,St}{D}$$

Where, P = test pressure
D = outside diameter of the tube,
t = nominal wall thickness of the tube
S = stress, which shall be taken as 40% of the minimum tensile strength at room temperature".

"(ii) Notwithstanding anything contained in clause (i), the hydraulic test for tubes in Maker's premises may be dispensed with by the Inspecting Authority provided that the tubes are subject to non-destructive testing by an appropriate method like ultrasonic or/and Eddy current testing.".

Regulation No.48.

(i) In clause (a) for the words "The tubes shall be manufactured from steel produced by the Open Hearth or Electric process", the following words shall be substituted, namely :-

"The tubes shall be manufactured from steel produced by the Open Hearth or Electric Process or any of the oxygen processes".

(ii) For sub clause (i) of clause (c), the following shall be substituted, namely :-

"(i) Diameter.-The external diameter of the tubes measured

at any point shall be within the following tolerances of the diameter specified :-

Types of tubes	Outside Diameter of Tubes	Tolerances
Hot finished	Upto and including 63.5 mm	+0.4 mm -0.8 mm
	Over 63.5 mm	±1%
Cold drawn	All sizes	+ 0% - 1%

Regulation No.51.

The following regulation shall be substituted, namely :-

"51(i) Hydraulic test - Each tube shall be tested at the Makers works on completion of manufacture and shall withstand a hydraulic pressure, to one and a half times the design pressure subject to a minimum of 0.70 kgf/mm^2 but not greater than the pressure calculated by the following formula.

$$P = \frac{2\ St}{D}$$

Where, P = test pressure
D = outside diameter of the tube
t = nominal wall thickness of the tube
S = stress, which shall be taken as 40% of the minimum tensile strength at room temperature".

(ii) Notwithstanding anything contained in clause (i), the hydraulic test for tubes in Makers' premises may be dispensed with by the Inspecting Authority provided that the tubes are subject to non-destructive testing by an appropriate method like ultrasonic or/ and Eddy current testing.".

Regulation No.53.

In clause (a) for the words "The tubes shall be manufactured from steel produced by the open Hearth or Electric Process" the followin shall be substituted namely :-

"The tubes shall be manufactured from steel produced by the Open Hearth or Electric process or any of the Oxygen process".

Regulation No.56.

The existing regulation shall be numbered as clause (i) thereof and after clause (i) as so numbered, the following shall be inserted, namely :-

(ii) Notwithstanding anything contained in clause (i), the hydraulic test for tubes in Makers' premises may be dispensed with by the Inspecting Authority provided that the tubes are subject to non-destructive testing by an appropriate method like ultrasonic or/and Eddy current testing.".

Regulation No.58.

(i) For clause (a), the following shall be substituted, namely :-

"(a) Material process :-

The steel shall be produced by an Open Hearth or Electric process or any of the Oxygen process. The steel shall not contain more than 0.05 percent of sulphur or of phosphorus.

(ii) For clause (c), the following clause shall be substituted, namely :-

"(c) Chemical composition. (1) The ladle analysis shall conform to the following requirements :-

Carbon 0.25% maximum
Silicon 0.40% maximum
Manganese 1.40% maximum
Phosphorous 0.05% maximum
Sulphur 0.05% maximum

When the ladle analysis is not available, the analysis of sample tubes selected at random may be used.

Where the temperature is below 400°C either 'rimming' or 'killed' steel may be used. If rimming steel is used in the manufacture of electric registance welded tubes, the strip shall be rolled in single widths and shall not be slit longitudinally except to trim the edges. The steel used for design temperature above 400°C but not exceeding 454°C shall be of the fully killed type. The question of high temperature creep strength of the material shall

be the subject of agreement between the manufacturer and Inspecting Authority".

Regulation No.59.

For Clause (b), the following shall be substituted, namely :-

"(b)(i) Flanging and drift expanding test:- the tube shall withstand either the flanging test or the drift expanding test at the option of the manufacturer.

(ii) Flanging test:- A test piece cut from the end of a tube in a plane perpendicular to the axis of the tube shall show no crack or flaw after flanging to the specified outside diameter as given in the table below :

(iii) Drift expanding test:- A test piece cut from the end of a tube in a plane perpendicular to the axis of the tube shall show no crack after expanding by a mandrel having an included angle of 30°, 45° or 60° at the option of the manufacturer to increase the outside diameter as given in the table below :

Type of test	Minimum specified tensile strength(s)	Outside diameter (D) of the tube	Increase of outside diameter of the tube
	kgf/mm^2	A=D<63.5mm B=63.5<D<150mm	%
Flanging test	S<42	A	17
		B	11
	S>42	A	16
		B	8
Drift expanding test		A	17
		B	11

Regulation No.60.

The following regulation shall be substituted, namely :-

"60. Tensile strength-(a) The tensile strength of the material cut from the finished tubes shall conform to one of the following four grades :-

(i) 31 to 41 kgf/mm^2
(ii) 36 to 46 kgf/mm^2
(iii) 41 to 51 kgf/mm^2
(iv) 46 to 56 kgf/mm^2

(b) The upper yield point at room temperature shall not be less than 50% of the specified minimum tensile strength at room temperature.

(c) The minimum values of the stress at proof limit 0.2% at elevated temperature (Et) of the material may be calculated by multiplying the specified minimum tensile strength at room temperature (R20) by the ratio (Et/R20) given in the table below.

Table:-Minimum values for the ratio of the stress at proof limit 0.2% at elevated temperature (Et) to the minimum specified tensile strength at room temperature (R20) of carbon steel tubes.

Temperature	*250°C	*275°C	300°C	325°C	350°C	375°C	400°C	425°C
Et/R20	0.40	0.38	0.36	0.34	0.33	0.32	0.31	0.30

*For temperature lower than 300°C any test required for acceptance purposes (in the absence of records of previous tests at these temperatures) shall be made 300°C, in which case the proof stress shall be not less than the value obtained by calculation for the specified minimum tensile strength at room temperature and the above ratio of 0.36 for 300°C.

(b) The breaking elongation in % shall be not less than $\frac{100\text{-}Rm}{C}$

Where, C = 2.2 for only gauge lengths of $L^o = 5\ do$ (or) $5.65\sqrt{A^o}$

d_o = original diameter of the round test piece,

A_o = original cross section of the rectangular test piece,

NOTE: C = 1.9 for gauge lengths of $4\sqrt{A_o}$ for test piece in Appendix B.

Regulation No.61.

The following regulation shall be substituted, namely :-

"61. Hydraulic test - Each tube shall be tested at the Maker's works on completion of manufacture and shall withstand a hydraulic pressure to one and a half times the design pressure subject to a minimum of 0.70 kgf/mm^2 but not greater than the pressure calculated by the following formula.

$$P = \frac{2\,St}{D}$$

P = test pressure
D = outside diameter of the tube
t = nominal wall thickness of the tube
S = stress, which shall be taken as 40% of the minimum tensile strength at room temperature".

Regulation No.63.

For clause (a), the following shall be substituted, namely :-

"(a) Tests specified in regulations 59 and 60 shall be made from each lot of 250 tubes or 610 metres or fraction thereof".

Regulation No.63 under the heading "COLD DRAWN ELECTRIC-RESISTANCE WELDED STEEL BOILER AND SUPERHEATER TUBES FOR DESIGN METAL TEMPARATURES NOT EXCEEDING 454°C (850°F)" shall be renumbered as 63A.

Regulation No.73.

The following regulation shall be substituted, namely :-

"73. Scope (a) This regulation shall cover carbon steel castings used in the construction of boilers and steam pipes including their fittings.

(b) For all types of steel castings conforming to these regulations only the maximum values for tensile strength are fixed. The minimum values shall be between 40 and 50 Kgf/mm^2".

Regulation No.74.

For clauses (a) and (b), the following shall be substituted namely :-

"(a) Process of manufacture - The steel used for castings shall be made by the open hearth or electric furnace or any other process which gives steel having equivalent properties.

(b) Chemical analysis :- The laddle analysis shall conform to the following requirements, namely :-

Carbon	0.25%	Maximum
Silicon	0.60%	Maximum
Manganese	1.40%	Maximum
Phosphorous	0.05%	Maximum
Sulphur	0.05%	Maximum

*A carbon content not exceeding 0.30% may be accepted subject to the agreement between the boiler maker and the Inspecting Authority".

Regulation No.75.

The following regulation shall be substituted, namely :-

"75. Freedom from all rectification of defects - The Steel castings shall have clean surfaces and shall be free from injurious defects. The specified permissible variations in size or thickness shall not be exceeded. Defects may be repaired by welding only, with the approval of the Inspecting Authority provided that the castings are stress-relieved after welding wherever necessary".

Regulation No.77.

The following regulation shall be substituted, namely :-

"77. Tensile Test : (a) The upper yield point at room temperature shall be not less than 50% of the specified minimum tensile strength at room temperature.

(b) A proportional test piece with $L_o = 5\ d_o$ shall be used as test specimen.

(c) The minimum values of stress at proof limit 0.2% at elevated temperature (Et) of the material may be calculated by multiplying the minimum specified tensile strength at room temperature (R20) by the value of ratio Et/R20 given in table under regulation 16.

(d) The breaking elongation in % shall be not less than

$\frac{93 - Rm}{2\ 3}$

Where, Rm = measured tensile strength at room temperature in kgf/mm^2 93 = a quality index

2.2 = a constant which is valid only when $L_o = 5\ d_o$

Where, L_o = gauge length

d_o = original diameter of the round test piece.

(e) If, however, the tensile tests are carried out on specimens conforming to any other standards, the material will be accepted provided the tensile strength and elongation computed on the basis of the dimension of the test pieces under the regulation shall conform to the above requirements'

Regulation No.79.

In clause (c), after the second paragraph, the following shall be inserted, namely :-

"High Class castings for which a factor greater than 80% is taken in computation of permissible working stress shall be subject to the following inspection requirements :

(i) Each castings shall be examined by radiographic or ultrasonic methods at all critical locations and found free from harmful defects. All the castings shall be fully machined to such an extent that all critical section are exposed for full thickness.

(ii) All castings shall be examined at all critical locations using magnetic-particle or penetrant-fluid procedure, or by grinding or machining and etching.

(iii) Castings found to be defective shall be rejected or repaired to the satisfaction of the Inspecting Authority. If repairs by welding are carried out the castings shall be subsequently stress- relieved or heat treated. Castings found to be unsound may be treated in accordance with regulation 80. Repaired areas of castings shall be re-examined by the Inspecting Officer in accordance with sub-clause (i) and shall be shown to be free from harmful defects.

(iv) Castings to which a quality factor of 0.90 is assigned

shall be clearly and permanently marked with a suitable symbol after being examined as above and found satisfactory.

"Note:- The provisions of the first paragraph of clause (c) of regulation 79 shall apply to the castings other than high class castings for which a factor greater than 80% is used in the computation of permissible working stress for shells of Boiler and integral superheater Drums and headers under regulations 271.".

In the heading above Regulation No.81, for the words "STEEL FORGINGS AND SOLID DRAWN HEADERS", the words "FORGED OR ROLLED PRESSURE PARTS OTHER THAN SEAMLESS DRUMS OF CARBON STEEL" shall be substituted.

Regulation No.81.

For clause (a),(b) and (c), the following shall be substituted namely :-

"(a) Process of manufacture - The steel used for the parts shall be made by the open hearth or electric or basic oxygen process or by any other process which gives steel having equivalent properties".

"(b) Chemical Analysis :-

The steel shall not contain more than 0.05 percent of sulphur or of phosphorus.".

"(c) Freedom from and rectification of defects.- Where not machined, the pipes, shall have workman like surfaces as normally obtained by rolling, forging or drawing. Provided that the minimum required thickness is maintained, minor surface defects may be admitted and other defects removed by mechanical means so as to achieve a smooth surface. Surface defects may also be repaired, by welding only, with the approval of the Inspecting Authority provided that the parts are stress relieved after welding, wherever necessary".

Regulation No.82.

The following regulation shall be substituted, namely :-

"82. Selection of test pieces (a) for testing, either the parts themselves shall be used or additional material of sufficient size for test pieces shall be available. In the case of headers for example, surplus lengths for test rings may be used. In the case of flanges swaged in dies, the punchings left may be used as test pieces in which case the identity of the material of the punching with that of the flange shall be evidenced in an adequate manner. The test may be performed also on the semi finished material for example a bar or a billet, provided it is given approximately the same reduction and heat-treatment as the finished forgings. For headers with closed ends, the test rings shall be cut off before dishing or reducing and shall be subject d to the same heat treatment as the headers themselves. In the case of headers which are closed by special covers, the test rin shall be cut off after heat-treatment. Similar procedures shall be followed for test pieces of other forgings".

(b) For testing, piece of one and the same cast of the same heat treatment batch as well as of similar dimensions may be gathered into one group. At least one test piece shall be made from each group.

(c) A proportional test piece with $L_o = 5\ d_o$ shall be used as a test specimen.

(d) Tangential test piece shall be used for headers where practicable. For headers with outside diameter less than 200 mm longitudinal test pieces may be allowed.

(e) Hydraulic Test- A hydraulic test shall be carried out at the Maker's works in accordance with the requirements of regulation 268, if required by the Inspecting Authority".

Regulation No.83.

The following regulation shall be substituted, namely :-

"83. Tensile strength: (a) The tensile strength of the material shall conform to one of the following four grades :-

(i) 37 to 45 kgf/mm^2
(ii) 42 to 50 kgf/mm^2
(iii) 47 to 56 kgf/mm^2
(iv) 52 to 62, kgf/mm^2

(b) The upper yield point at room temperature shall be not less than 50% of the specified minimum tensile strength.

(c) The minimum values of the stress at proof limit 0.2% at elevated temperature (Et) of the material may be calculated by multiplying the minimum specified tensile strength at room temperature (R20) by the value of the ratio Et/R20 given in the table under Regulation 16.

(d) The breaking elongation in percentage shall not be less than $\frac{93 - Rm}{2.2}$

Where, Rm = Measured tensile strength at room temperature in kgf/mm^2

93 = quality index

2.2= a constant which is valid only when $L_o = 5\ d_o$

Where, L_o = guage length

d_o = original diameter of the round test piece".

Regulation No.151.

For clause (d), the following shall be substituted, namely :-

"(d) Arc welded butt joints shall be made by the metallic shielded arc process and post weld heat treated effectively except in the following cases :

for alloy steel.

(i) in case of 0.5 Molybdenum Steel if thickness does not exceed 13 mm and outside diameter does not exceed 127 mm.

(ii) in case of 1 Chromium ½ Molybdenum steel if thickness does not exceed 13 mm and outside diameter does not exceed 127 mm and pre-heated to 125°C.

(iii) in case of 2¼ Chromium 1 Molybdenum steel, post weld heat treatment is not necessary under the following conditions :

(1) a maximum specified Chromium content of 3.0%.
(2) a maximum nominal outside diameter of 102 mm.
(3) a maximum thickness of 8 mm.
(4) a maximum specified carbon content of 0.15%.
(5) a maximum pre-heat temperature of 150°C.".

Regulation No.154.

For sub-clause (i) of clause (a), the following shall be substituted, namely :-

"(i) Headers and Mud Boxes, etc., of water tube Boiler may be of seamless or welded steel, or of cast steel complying with the requirements of the provisions contained in regulations 73 to 80. Where welded, the welding shall be stress relieved, radiographed or ultrasonically examined and in all respects shall be to the satisfaction of the Inspecting Authority".

Regulation No.235.

The following regulation shall be substituted, namely :-

"235. Manufacture (a) Carbon steel for seamless forged Drums shall be made by the open-hearth or electric furnace or basic oxygen process or any other process which gives steel having equivalent properties.

(b) Forging which may have integral ends, ends closed by means of dished plates, open ends for multi-joints drums or any combination of these shall be made from solid cast ingot which is punched, bored or trepanned, or from a hollow cast ingot and shall comply entirely with the relevent requirements of Chapter II".

Regulation No.236.

The words and figures "and oxygen process steel shall in addition not contain more than 0.006 percent of nitrogen" shall be omitted.

Regulation No.237.

The following paragraph shall be added at the end, namely :-

"Where not machined, the forgings shall be workman like surfaces as normally obtained by hot working. Provided that the minimum specified thickness is maintained, minor surface defects may be admitted and other defects removed by mechanical means so as to achieve a smooth surface. Surface defects may be repaired, by welding only, with the approval of the Inspecting Authority provided that the drum is stress relieved after welding, wherever necessary".

Regulation No.240.

For clauses (b) and (c), the following shall be substituted, namely :-

"(b) Tensile test pieces - The tensile strength and percentage elongation shall be determined from round test pieces with gauge lengths of 5 d_o.

(c) Tensile test.- (i) The tensile strength and percentage elongation shall be in accordance with the requirements of regulation 9 and 16. (ii) The upper yield point at room temperature shall be not less than 50% of the specified minimum tensile strength at room temperature. The minimum values of the stress at proof limit 0.2% at elevated temperatures (Et) of the material may be calculated by multiplying the minimum specified tensile strength at room temperature (R20) by the value of the ratio (Et/R20) given in the table under regulation 16.

(iii) The breaking elongation in percentage shall be not less than $\frac{100 - Rm}{2.2}$.

Where, Rm = tensile strength at room temperature, in kgf/mm^2

100= quality index

2.2= a constant which is valid only when $L_o = 5\ d_o$

Where, d_o = original diameter of round test piece".

Lo = gauge length

Regulation No.243.

The following regulation shall be substituted, namely :-

"243. Tolerance - (a) The deviation from circularity in any section shall in the case of normalised drums, not exceed 2% and in case of stress relieved drum 1%. The deviation from a straight line shall not exceed 0.3% of the cylindrical length".

(b) In order to determine the deviation from circularity of the drums the maximum and minimum internal diameter at one cross section shall be measured. From these measured values the percentage deviation from circularity shall be calculated according to the following formula :-

$$C = \frac{2(dmax - dmin)}{(dmax + dmin)} \times 100$$

Where, C = percentage deviation from circularity of the drums.
d = internal diameter at one cross section.

In order to determine the deviation from a straight line, a stretched line should be placed longitudinally against the sides and its largest distance from the shell line concerned shall be measured. From this distance, and from the cylindrical shell, the deviation from the straight line shall be calculated".

Regulation No.249.

For The second and third paragraph, the following shall be substituted namely :-

"Fully dimensioned drawings of the proposed welds preparations of the main seams drawn to a scale which clearly shows all the relevant details shall be furnished.

Sketches showing details of the welds preparations for the attachment of the stand pipes, branch pipes and seatings and their locations relative to the longitudinal and circumferential seams and to other openings shall be furnished".

Regulation No.258.

(i) For sub-clause (iv) of clause (a), the following shall be substituted, namely :-

"(iv) Three notched-bar impact test specimens".

(ii) For clause (b), the following shall be substituted, namely :-

"(b) Surfaces of tensile, bend and impact test specimens corresponding with the outside or inside of the drums shall be only lightly dressed so that the rolled surface of the parent metal is not wholly removed, except that where the rolled surfaces of the abutting plates are not level with one another, one plate may be machined at each face of the weld provided the depth of metal removed does not exceed 0.8 mm".

(iii) After figure 16, for entry against item 4, the following shal be substituted, namely :-

"4. notched-bar impact test specimen".

Regulation No.259.

(i) For clauses (a) and (b), the following shall be substituted, namely :-

"(a). Welded joint - The dimensions of the reduced tensile section shall be those shown in fig.18. The width of the reduced section shall be at least 25 mm.

If the thickness of the plate does not exceed 30 mm, the thickness of the specimen shall be equal to the plate thickness and the plate surface of the specimen shall be machined to take away the surface irregularities of the plate and the weld.

If the plate thickness exceeds 30 mm, the tensile test shall be carried out on several reduced section specimens, each having a thickness of at least 30 mm and a width at the effective cross-section of at least 25 mm. These specimens shall be taken out of the test piece in such a way that the tensile test covers the whole thickness of the weld joints as shown in figure 18. In this case the result of the test of every test specimen concerned shall meet the requirements specified in regulation 260 (a).

(b) All weld metal : The dimensions of the all weld metal tensile test specimens shall be those given in figure 19.

The diameter shall be the maximum possible consistent with the cross section of the weld but in no case more than 20 mm. the gauge length shall be equal to five times the diameter."

(ii) For figure 18, the following figures shall be substituted, namely :-

Figure 18 A to be printed here.

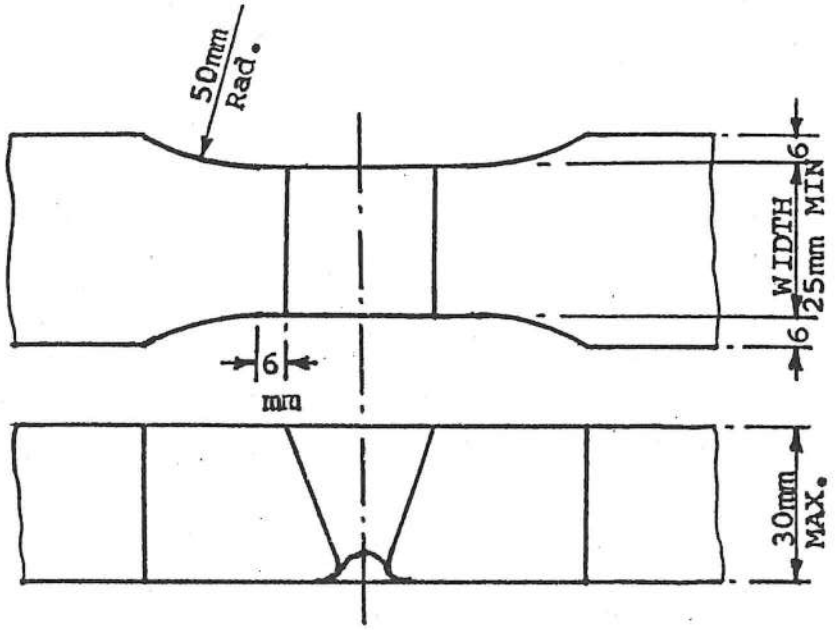

Fig. 18 A

REDUCED SECTION TENSILE SPECIMEN

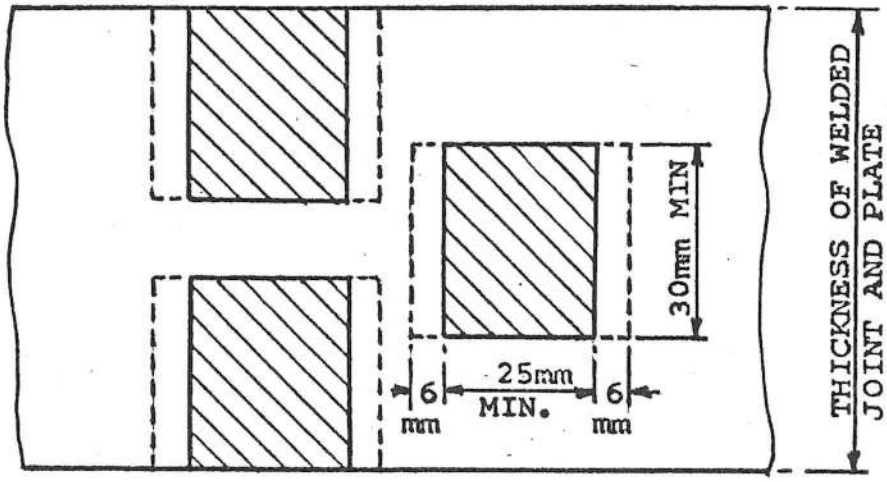

Fig. 18 B

REDUCED SECTION TENSILE SPECIMEN IN A THICK PLATE

FIGURE 18 B TO BE PRINTED HERE.

(iii) For figure 19, the following figure shall be substituted, namely :-

FIGURE 19 TO BE PRINTED HERE.

Regulation No.261.

For clause (a), the following shall be substituted, namely :-

"(a) One for direct and one for reverse bending shall be taken transversely to the weld and where the thickness of the plate permits, one should be above the other. The specimens shall be rectangular in section so as to have a width equal to one and half times the thickness of the specimen but not less than 30 mm. The surface of the specimens shall be machined just to remove the surface irregularities of the plate and the weld. The corners of the specimens shall be rounded to a radius not exceeding 10% of the thickness of the specimen.".

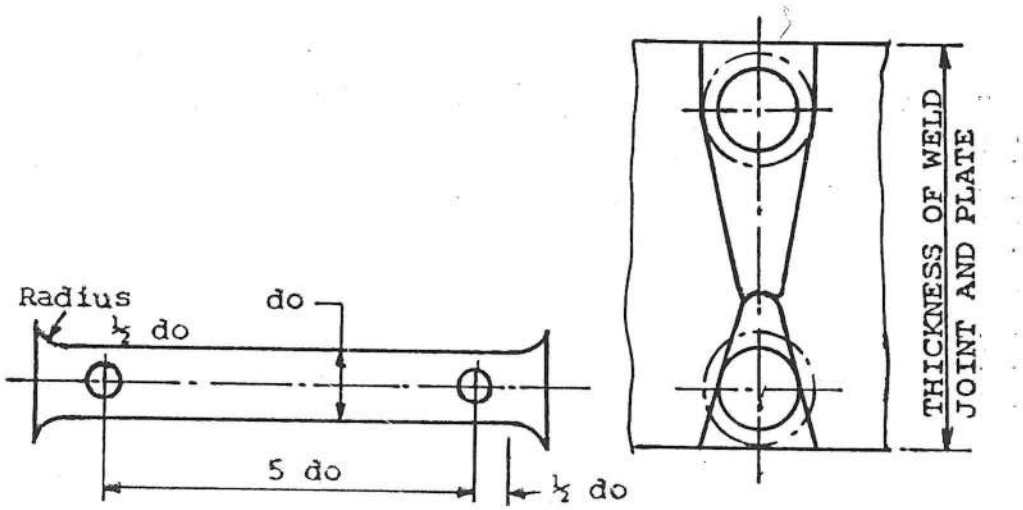

Fig. 19

ALL WELD METAL TEST SPECIMEN

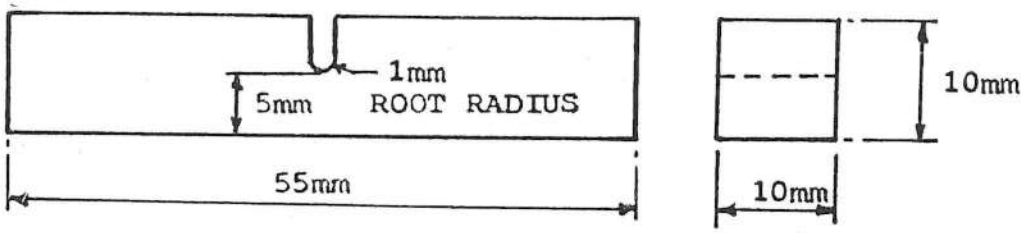

Fig. 21A
STANDARD U NOTCH TEST PIECE

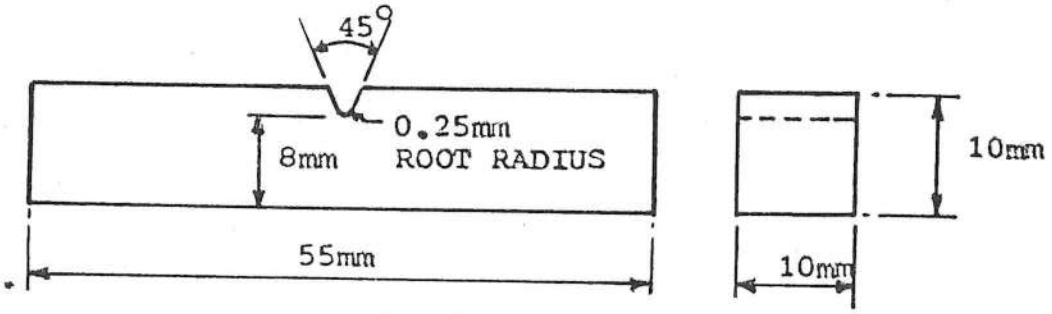

Fig. 21B

STANDARD V NOTCH TEST SPECIMEN

Regulation No. 262.

The following regulation shall be substituted, namely :-

"262. Bend Tests :- The specimen shall be mounted in such a way that the axis of the former is in the middle of the weld, and on roller supports the faces of which are separated by a distance determined by the thickness of the specimen.

The test specimen shall be pushed through the supports by a former having a diameter also determined by the thickness of the specimen. The requirements of the Table below, relating to the thickness of the test specimen shall apply.

Table - Bend Test Requiremen-ts

Specified minimum tensile strength of plate	Diameter of former	Free space between supports at the end of test
Below 44 kgf/mm^2	2t	4.2t
From 44 to 54 kgf/mm^2	3t	5.2t
Above 54 kgf/mm^2	4t	6.2t

On completion of the test, no crack or defect on the outer surface of the specimen shall be greater than 1.5mm measured acros the specimen, or 3 mm measured along the specimen. Premature failure at the corners of the specimen shall not be considered as a cause for rejection:

Regulation No. 263.

The following regulation shall be substituted, namely :-

"263. Notched-Bar Impact Tests.-The notched bar impact test specimens are to be one of the two types and dimensions shown in figure 21A and 21B. The notch shall be contained in the weld-metal at approximately the axis of the weld and the axis of the notch is to be perpendicular to the surface of the plate.

The test shall be carried out as follows :-

For the U-Notch specimen at a temperature of 20±2°C.
For the V-Notch specimen at a temperature of 50±2°C.

In the case of V-notch specimen, the machining of the bottom of the notch shall be done very carefully.

The choice between U-notch and V-Notch specimen shall be at the discertion of the Inspecting Authority. The minimum result to be obtained from the Impact test pieces shall be:

(a) U-notch specimen 5.50kgfm/cm^2

(b) V-notch specimen 3.46kgfm/cm^2

Note-Above values are equivalent to 2.76 kgfm divided by sectional area below the notch.

Figures 21A and 21B to be printed here.

Regulation No. 265.

(i) For the first paragraph of clause (b), the following shall be substituted namely :-

"Every portion of the longitudinal and circumferential welded joints of the drums shall besubjected to radiographical examination or ultrasonic examination. Where ultrasonic examination is used, it shall be demonstrated to the satisfaction of the Inspecting Authority that the equipment and the technique used are

satisfactory. The manufacture shall ensure that the operator employed is competent to use the equipment, apply the technique and interpret the results of the examination".

(ii) After clause (b), the following shall be added, namely :-

"(c) Magnetic particle flaw detection: Magnetic method of flaw detection shall be employed wherever possible for ferritic steel;

(d) Dye-Penetrant flaw detection: Dye-Penetrants or equivalent method for flaw detection shall be employed for Austenetic or other nonmagnetic steel".

Regulation No.266.

For clause (d) the following shall be substituted, namely :-

"(d) Removal of defects - Defects shall be cut out by chipping or machining or by burning out by the Air Arc Weld Process".

Regulation No.267.

(i) In clause (a), the following shall be inserted at the end, namely :-

Heat treatment of Alloy Steel plates shall be carried out on the basis of composition of the alloy as shown in the table below:-

TABLE

Type of Steel	Range of Temperature	Time at temperature per 25mm of thickness of plate
½ Mo ½ Cr ½ Mo	620° - 660°C	1 hour (1 hour Min.)
1 Cr ½ Mo 1¼ Cr ½ Mo	620° - 660°C	1 hour (1 hour Min.)
2¼ Cr 1 Mo	650° - 750°C	1 hour (1 hour Min.)

(ii) After clause (a), the following clauses shall be inserted, namely :-

"(aa) The heat treatment referred to in clause (a) shall not be necessary in case of Carbon Steel.

Provided that the thickness of the part/weld/recess does not exceed 20mm, and the carbon content does not exceed 0.25%".

"(ab) Where the welded joint connects parts that are of different thickness, the thickness to be considered in applying the limiting thickness of 20 mm for carbon steel shall be the following nominal thickness including corrosion allowance :

(i) The thinner of two adjacent butt welded component including shell to end connection;

(ii) the thickness of the shell in connections to flat ends;

(iii) the thickness of the shell or end in nozzle attachment welds;

(iv) the thickness of the nozzle at the joint in nozzle to flange connections;

(v) the thickness of the pressure part, at the point of attachment, where a non pressure part is welded to a pressure part.".

(iii) For clause (e), the following shall be substituted, namely :-

"(e) For this heat treatment, the drum shall be placed in a furnace sufficiently larger to accommodate the whole drum. The furnace shall have proper means of temperature measurement and control and shall be capable of heating the whole of the drum to a uniform temperature. It shall be so designed as to prevent direct impingement of flame on the drum. The temperature of the furnace at the time the drum is placed in it shall not be higher than 300°C.

For carbon steel a stress relieving heat treatment shall be performed by heating the part to at least 600 ± 20°C.

When required by the characteristic of the material, different temperatures may be necessary to obtain proper stress - relieving. The part to be stress-relieved shall be brought slowly up to the specified temperature and held at that temperature for a period proportioned on the basis of at least 2½ minutes per millimeter of

the maximum thickness of the part (Approximately one hour per 25 mm of thickness) and shall be left to cool in the furnace to a temperature which for parts with a thickness greater than 20 mm does not exceed 400°C.

After withdrawal from the furnace the part shall be allowed to cool in a still atmosphere. A temperature time diagram of the stress-relieving process shall be provided for a welded shell or drum and a similar diagram for other welded pressure parts shall be provided where Inspecting Authority requires it.

Note - Other stress-relieving heat treatment at a temperature as low as 550°C may be adopted provided attention is given to the holding time in order to ensure a sufficient degree of stress-relieving.".

Regulation No.268.

The following shall be substituted, namely :-

"268. Hydraulic tests at makers works - Drums and similar components of the water tube boilers shall be hydraulically tested on completion of manufacture at the maker's works in the presence of Inspection Officer to 1½ times the design pressure without indication of weakness or defect. Alternatively this test may be made on completion of erection at site:

In case of drums and headers which are to be fitted with tubes, the test may be made before drilling tube holes but after the attachment of nozzles and similar fittings. The test pressure shall be maintained for a sufficient period to permit complete examination by the inspecting Authority. In case of drums of 'composite' constructions, e.g. part rivetted and part welded seams or seamless forged drums shells with ends attached by fusion welding the test pressure shall be the same as for the fusion welded drums.

Should the hydraulic test reveal any defect in the welded seam, it shall not be repaired unless agreed to by the Inspecting Authority.

On completion of agreed repairs to a drum which has previously been stress-relieved by heat treatment, further heat treatment

if required by the Inspecting Authority, shall be done and the drums shall again be subjected to hydraulic test".

Regulation No.271.

For sub-regulations (i) and (ii), the following shall be substituted, namely :-

"(i) For temperatures at or below 454°C, the smaller of the following two values:

$$f = \frac{Rt}{1.5} \quad \text{or} \quad \frac{R}{2.7}$$

(ii) For temperatures above 454°C, the least of the following three values :

(a) $\frac{Rt}{1.5}$ (b) $\frac{SR}{1.5}$ (c) Sc".

Regulation No. 281.

In the footnote, after the existing note, the following shall be inserted, namely :-

"In the case of automatic or semi-automatic oil-fired or gas-fired boilers, low water alarms may be fitted in preference to fusible plugs provided such boilers are equipped with automatic tripping device to disconnect fuel supply and to start the feed pump simultaneously in the event of low water in the boilers".

After regulation 281, the following new regulation shall be inserted, namely :-

"281 A. Additional requirements for automatic boilers only.

(1) General:-,

Every boiler which is provided with the appropriate water level and/ or firing control, to allow for automatic working, shall comply with the following requirements.

(a) In the event of failure of automatic control, boiler shall be capable of being brought under immediate manual control.

(b) In those cases where the control and alarm devices are housed in chambers external to the boiler, the following shall apply :

(i) the boiler shall have provision made for isolating the steam and water connections of the chambers from the boiler. Such isolating valves shall be capable of being locked in the open position and should preferably be of the parallel slide type but if screw down stop valves are fitted, those on the water connection shall be mounted with the spindle horizontal to avoid the possibility of an air lock.

The steam and water connections of the chambers shall be not less than 25mm bore. In these cases where sequencing control water valves are fitted, the steam isolating valve may be omitted:

(ii) the boiler shall have means provided to test the operation of the control or alarm and to blow through separately the water connection and the chamber to prevent the accumulation of deposits. The means provided for flowing through shall be sequencing valves or equivalent devices so arranged that the water connection to the boiler cannot be shut off unless the drain connections to the chamber is open;

(iii) the boiler shall have a drain system from the chamber which provides a visual indication of flow.

Pundishes of adequate size, placed in a prominent position shall be used wherever practicable.

(c) Where the boiler is provided with electrical equipment for water level and firing control, it shall have this equipment so designed that any fault in the circuits caused both in the fuel and air supply the boiler to be automatically shut off. Positive means requiring manual resetting shall be provided to cut off the fuel and air supplies to the boiler should there be a failure of electricity supply to water level and/or firing control equipment. All electrical conductors and equipment in connection with water level and firing controls shall be of adequate size and shall be properly insulated and protected against danger including adequate protection against the ingress of moisture and the effects of high temperature.

(d) Where the evaporating capacity of the boiler is greater

than 3700 kg/hr it shall have automatic water level alarms and firing controls and can be tested regularly without altering the level of water in the boiler. The water level alarms may be incorperated in the automatic control systems.

With a perceptible water level which are arranged for automatic working and not intended for continuous supervision shall be provided with an entirely independant and separately operated over-riding control in addition to the water level and firing controls specified in clauses (2) and (3). The over-riding control shall comply with the following requirements :-

(i) Cut off fuel supply to the burners or the fuel and air supply to solid fuel stoker and operate an audible alarm when the water level in the boiler falls to a predetermined low water level :-

(ii) Be of the lock-out type and so arranged that control or its electricals circuit has to be manually reset before the boiler can be brought back into operation;

(iii) Be provided with its own entirely independent electrical control circuit.

(e) Where mounted externally to the boiler, the over-riding control shall :-

(i) Be provided with its own chamber;

(ii) Comply with the requirements of clause (b)

"(2) Automatic water level control:

Automatic water level controls shall be as follows:

(a) Flot or displacer operated; or

(b) Operated by electrical probe or theremostat; or

(c) Operated by other approved principle subject to satisfaction of the Inspecting Authority. The control equipment shall regulate the feed-water supply to the boiler in order to maintain effectively the level of water in the boiler between pre-determined limits.

(3) Automatic firing controls:

Automatic firing controls shall comply with the following requirements:-

"(a) At all times they shall control effectively the supply of fuel

and air to the combustion equipment;

(b) They shall shut off the fuel supply to the burners or the fuel and air supply to the stoker under the following conditi ons:

(i) Flame failure or pilot flame failure in the cases of gas, oil or pulversied fuel fired boilers. This control shall be of the lock-out type required to be manually reset;

(ii) Failure to ignite the fuel at the burner within a pre-determined time. The control shall be of the lock-out type required to be manually reset;

(iii) When the water level in a boiler with a perceptible water level falls below a pre-determined safe level.

The control shall also cause an audible alarm to sound.

(iv) Failure of forced or induced draught fans or any automatic flue damper.

(v) Increase in boiler pressure to a predetermined value.

(vi) When the outlet steam temperature in a forced flow once-through boiler increases to a pre-determined value".

Note: The above provisions do not apply to once-through forced circulation boiler".

Regulation No.282:

(i) In clause (a), for sub-clause (i), the following shall be substituted, namely :-

"(i) Steel castings shall comply with regulations 73 to 80"

(ii) In clause (a), the footnote with asterisk make shall be omitted.

(iii)In clause (a), after sub-clause (v), the following shall be inserted, namely :-

"(vi) Alloy steel castings shall comply with the following requirements"

Carbon Molybdenum Castings

Chemical composition %	
Carbon	0.25 max.

Manganese	0.50 to 1.00
Molybdenum	0.40 to 0.70
Nickel	0.50 max.*
Chromimum	0.20 max.*
Copper	0.30 max.*
Sulphur	0.05 max.
Phosphours	0.05 max.

*Incidental elements. Total not to exceed 0.80%. If Aluminium is used as deoxidiser, not more than 225 gm. of aluminium per metric ton of steel shall be used.

Mechanical properties :	
Minimum Tensile strength	47 kg/mm^2
Minimum yield point	25 kg/mm^2
% Elongation on gauge length=$5.65\sqrt{A}$	17 min.
Charpy Impact value	5.0 kgm/cm^2 Min.
Bend test	120 on D=3t.

(Where D=diameter of the mandrel and t=thickness of test piece)

Heat treatment :

The castings shall be normally supplied in the annealed or normalised condition to obtain the desired properties. The normalised castings may be tempered, at the discrection of the Inspecting Authority.

Chromium Molybdenum steel castings: chemical composition (%)

	Gr.A	Gr.B
Carbon	0.20 max.	0.18 max.
Silicon	0.60 max.	0.60 max.
Manganese	0.50 to 0.80	0.40 to 0.70
Chromium	1.00 to 1.50	2.00 to 2.75
Molybdenum	0.45 to 0.65	0.90 to 1.20
Nickel*	0.40 max.	0.40 max.
Copper*	0.40 max.	0.40 max.
Sulphur	0.05	0.05 max.
Phosphorus	0.05 max.	0.05 max.

*Incidental elements.

Mechanical Properties:

	Gr.A.	Gr.B.
Minimum Tensile strength kg/mm^2	49	49
Minimum yield point kg/mm^2	28	28
% Elongation on gauge length=$5.65\sqrt{A}$	17 min.	17 min.
Minimum Charpy Impact Values kgm/cm^2	4	4
Bend test	120° on D=3t	90° on D=3t

(Where t=thickness of the test piece; D=diameter of the mandrel).

Heat Treatment:

The castings shall be supplied in the annealed or normalised condition to obtain the desired properties. If normalised, the castings shall be subsequently tempered at a temperature not exceeding 650°C in the case of Gr.A and 690°C in the case of Gr.B. The tempering temperature may be varied by the Inspecting Authority to suit the steel being tempered.

NOTE: Alloy steels other than those specified above may be accepted at the discretion of the Inspecting Authority.

(vii) Alloy steel forgings shall comply with the following requirements namely :-

Carbon Molybdenum steel forging for design metal temperature, not exceeding 538°C.

Chemical Composition (%)

Carbon			0.20 max.
Silicon	0.10	to	0.35
Manganese	0.45	to	0.80
Molybdenum	0.40	to	0.70
Nickel			0.40 max.*
Chromium			0.25 max.*
Copper			0.40 max.*
Sulphur			0.05 max.
Phosphorus			0.05 max.

*Incidental elements. Total not to exceed 0.80%. If aluminium is used as a deoxidiser not more than 225 grams per metric ton of steel shall be used.

Mechanical Properties :

Tensile strength kg/mm^2	44 to 53
Minimum yield point kg/mm^2	27
% Elongation on a guage length of $5.65\sqrt{A}$	20 min.

Bend test:

Longitudinal	180° on D=t
Transverse	180° on D=2t

(Where D=diameter of the mandrel; t=thickness of the test piece)

Heat Treatment:- The forgings shall be supplied in the normalised condition. If tempering is done after normalising the tempering temperature shall not exceed $650^\circ C$.

The tempering temperature may be varied by the inspecting Authority to suit the steel being tempered.

Forged Chromium Molybdenum Steel :-

Chemical composition (%)

	Gr.A.	Gr.B.
Carbon	0.20 max.	0.15 max.
Silicon	0.10 to 0.35	0.10 to 0.35
Manganese	0.30 to 0.80	0.30 to 0.80
Chromium	0.70 to 1.10	2.00 to 2.50
Molybdenum	0.45 to 0.65	0.90 to 1.10
Nickel	0.40 max.*	0.40 max.*
Copper	0.30 max.*	0.30 max.*
Sulphur	0.04 max.	0.04 max.
Phosphorus	0.04 max.	0.04 max.

*Incidental elements. If aluminium is used as a deoxidiser not more than 225 gm. per metric ton of steel shall be used.

Mechanical properties :

	Gr.A	Gr.B.
Minimum tensile strength kg/mm^2	42.5	55
Minimum yield point kg/mm^2	25.5	38
% Elongation on guage length $5.65\sqrt{A}$	23 min	19 min

Longitudinal	23 min.	19 min.
Transverse	18 min.	15 min.
Bend Test :		
Longitudinal	180° on D=3t	150° on D=3t
Transverse	180° on D=6t	180° on D=6t

(Where D=diameter of mandrel; t= thickness of the test piece)

Heat Treatment :- The forging shall be supplied in the normalised and tempered condition, the normalising temperature for both grades being 920°C to 960°C and the tempering temperature being 620°C to 660 C in the case of Gr.A and 650°C to 700°C in the case of Gr.B. The tempering temperature may be varied by the Inspecting Authority to suit the steel being tempered.

(iv) For clause (b), the following shall be substituted, namely :-

(b) "Limits of cast Iron:
cast Iron shall not be used for:-
(a) Temperatures above 220°C;
(b) Pressure exceeding 13 bar guage;
(c) Valves exceeding 200mm nominal bore which are connected directly to the boiler;
(d) Wedge or double disc gate valves which are connected directly to the boiler;
(e) Boiler blow down fittings.

Explanation: The expression connected directly to the boiler' covers and valve which cannot itself be isolated from the boiler.

(v) After clause (b), the following note shall be inserted, namely :-

"Note.-Spheroidal iron may be used for temperature not exceeding 282°C and pressure not exceeding 17.58 kg/cm^2 provided it complies with the following requirements in

respect of the physical properties.

(a) 0.2% proof stress 250 kg/mm^2

(b) minimum elongation percent-12.".

(vi) For clause (c), the following shall be substituted, namely :-

(c) Limits of copper alloy:

Copper alloy shall not be used for temperatures above 225°C where the valves are connected directly to the boiler. In the case of valves not connected directly to the boiler this temperature limitation may be increased to 260°C";

Regulation No.290.

(i) For clause (a), the following shall be substituted, namely :-

"(a) All chests and fittings shall be smooth, sound and free from flaw, cracks or other injurious defects. After completion, the chests shall be tested hydraulically at the manufacturing works to at least twice the working pressure of the boiler for which they are intended.

"Hydraulic test shall be made with water which may contain a corrosion inhibitor, with kerosene or with other sutable liquid provided its viscosity is not greater than that of water at a test temperature not above 52°C.

(ii) For clauses (c) and (d), the following shall be substituted, namely :-

"(c) The working pressure and the thickness of Bronze and Cast Iron Valve chests shall be determined by the following formulae, subject to minimum thickness as specified in regulation 283 (b):

$$WP = \frac{R \times (T-C)}{4.5 \times D} \quad \text{.....Eqn. (76)}$$

$$T = \frac{4.5 \times WP \times D}{R} + C \quad \text{.....Eqn. (77)}$$

Where R is the minimum specified tensile strength of the grade of the material.

D - is the external diameter of the chest.
T - is the minimum thickness of the chest, excluding tolerance and
C - is the minimum positive tolerance as specified here under :-

For Bronze Chests C = 1.5 mm
For Cast Iron Chests C = 5 mm

(d) the working pressure and the thickness of the steel valve chest of circular cross section shall be determined by the following formulae, namely :-

$$\text{Working Pressure} = \frac{2f\,(T - C)}{D - T + C}$$

$$T = \frac{WP \times D}{2f + WP} + C$$

"f = allowable stress in kg/mm^2 for the material at the working metal temperature "t" to be determined on the basis given below :-

The allowable stress "f" at or below 454°C is the lower of the following two values.

$$f = \frac{Et}{1.5} \qquad f = \frac{R}{2.7}$$

For temperatures above 454°C, the least of the following three values.

(a) $f = \frac{Et}{1.5}$

(b) $f = \frac{R}{1.5}$

(c) f = Sc".

Where, Et = Minimum value of yield point (0.2 percent proof stress) at temperature 't'

R = Minimum specified tensile strength for the grade of

Sr = the average stress for the grade of steel concerned to produce rupture in 100,000 hours.

If the width of the scatter band of results obtained when determing this value exceeds ± 20 percent of the average value, then Sr shall be taken as 1.25 times the minimum stress at temperature,'t' to produce rupture in 100,000 hours.

Sc The average stress to produce an elongation (creep) of 1% in 100,000 hours for the grade of steel concerned at temperature 't'. For metal temperature t below 250°C values of 'f' for 250°C shall be used.

Note: The allowable stress for cast steel shall be 80 per cent of that determined on the above basis.

D = the external diameter of the chest
C = the minimum thickness of the chest, excluding tolerance and
T = the minimum positive tolerance as specified hereunder;
For cast steel chest C = 5 mm
For forged or stainless steel chest C = 2.5 mm

Note: "Over and above the calculated thickness, additional thickness needed for assembly stresses, valve closing stresses, shapes other than circular and stress concentrations, shall be provided by the manufacturers to the satisfaction of the Inspecting Authority".

(iii) After clause (d), the following shall be inserted, namely :-

"(e) the number of valves and fittings which shall be made available to the Inspecting Officer (excluding mechanical tests) shall be as follows:

Upto and including 51 mm	10 percent
Over 51 mm and upto and including 76 mm of the number of chests	15 percent
Over 76 mm and upto and including 114 mm of the number of chests	20 percent
Over 114 mm	100 percent

If the Inspecting Authority is satisfied that the manufacturer has

adequate facilites for testing and inspection of valves intended for service pressure exceeding 10.5 kg/cm^2 or temperature exceeding 204°C and actually tests each fitting at his works, the Inspecting Authority may at his discreation undertake test on a sample basis".

(iv) After clause (e) the following shall be inserted, namely:

"(f) The working pressure and the minimum thickness of the steel valve chest of spherical cross section shall be determined by the following formula, namely :-

$$\text{Working Pressure} = \frac{4f\,(T-C)}{D-0.8\,(T-C)}$$

$$T = \frac{WP \times D}{4f + 0.8WP} + C$$

Where T = the minimum thickness of the chest.
D = the external diameter of the chest.
f = allowable stress for the material to be determined on the basis given in clause (d) above.
C = the minimum positive tolerance as specified hereunder;

For Cast Steel Chest C = 5mm.

For Forged or stainless steel chest C = 2.5

Regulation No.292.

For clauses (a),(b) and (c), the following shall be substituted, namely :-

(a) Ordinary lift safety valve:

A safety valve in which the valve head lifts automatically a distance of at least D/24 with an over-pressure not exceeding 10% of the set pressure. There shall not be any mechanical stop which would prevent the valve head from being lifted a distance of atleast D/8. D is the minimum bore of the body seat.

(b) High lift safety valve:

A safety valve in which the valve head lifts automatically a distance of atleast D/12 with an over pressure not

exceeding 10% of the set pressure. There shall not be any mechanical stop which would prevent the valve head from being lifted a distance of atleast D/8. D is the minimum bore of the Body seat.

(c) Full lift safety valve:

A safety valve in which the valve head lifts automatically a distance such that the area of discharge which limits the flow through the valve is between 100% and 80% of the minimum area at any section at or below in body seat. This lift is achieved by a rapid opening within an over pressure not exceeding 5% of the set pressure".

Regulation No.293.

(i) For clause (a) and (b) the following shall be substituted, namely :-

"(a) Discharged capacity of Safety Valves :-

(a) Saturated steam :-

The rated discharge capacity of safety valve which discharges saturated steam shall be calculated using the following equation:

$E = CAP$ .... Eqn. (78)

Where E = rated discharge capacity of saturated steam (Kg/h):

P = highest pressure of any safety valve mounted on the boiler(bar absolute);

A = area (mm^2);

For the ordinary lift and high lift safety valves A is the area of the minimum bore of the body seat. For full lift safety valves A is the area of discharge described in clause (c) of regulation 292 and its value can only be obtained from the safety valve manufacturers. C is a constant taken from the following table, appropriate to the type of the valve or as established by tests carried out in accordance with Appendix L.

Type of valve	Value of the constant 'C'
Ordinary lift	0.05
High lift	0.10
Full lift	0.24

(b) Superheated steam:

The rated discharge capacity of a safety valve which discharge super heated steam shall be calculated using the following equation :-

$$Es = \frac{E}{\sqrt{1 + \frac{2.7Ts}{1000}}} \quad \text{... Eqn (79)}$$

Where Es is the rated discharge capacity of super heated steam (kg/h);

E is the rated discharge capacity of saturated steam calculated using equation 78 (Kg/h).

Ts is the degree of superheat (^{o}C)

Equation 79 may be used to determine the rated discharge capacity of safety valves at super-critical steam pressure. In these cases the saturation temperature of the steam shall be taken as 375°C".

(ii) For clause (c), the following shall be substituted, namely :-

"(c)-The total peak load evaporation of a boiler shall be calculated on the basis of evaporation not less than 30kg/hr./m^2 of heating surface (exclusive of superheater and non-steaming economiser). In the case of Waste Heat Boilers however, when the evaporation per square metre of the heating surface is certified by the manufacturers to be less than 30 kg., the minimum number of safety valves required may be calculated on the basis of the actual maximum evaporation of the boiler.".

Regulation No.294.

The following regulation shall be substituted, namely :-

"294. Over pressure of Safety Valves :- The safety valves shall be so designed that they attain rated dischcarge capacity with the over pressure not greater than that given in regulation 292; provided that the safety valves which have a discharge area less than 80% of the flow area, the over pressure at which the design lift is attained shall not exceed 10% of the set pressure. For safety valves having discharge area 80% or more of the flow area, the over pressure at which the design lift is attained shall not exceed 5% of the set pressure.".

Regulation No.295.

The following regulation shall be substituted, namely :-
"295. Pressure Drop:-

The safety valves shall reset at a pressure at least 2.5% below, but not more than 5% below the safety valve set pressure. The 5% limit is increased to 10% for valves having a body seat bore less than 32mm and/or having a set pressure of 2 bar gauge or less".

Regulation No.296.

The following regulation shall be substituted, namely:-

"(a) Safety Valves shall be mounted, without any intervening valve, on pads or branches used for no other purpose. The axis of the valve shall be vertical. The cross-sectional area of the bore of each pad or branch shall be at least equal to the area of the bore at the inlet of the safety valve, or where two or more safety valves are mounted on the same pad or branch, at least equal to the sum of the areas of the inlet bores of all the safety valves.

(b) Branches shall be as short as possible so as not to impair the proper action of the safety valves or impose any undue stress on the branches at their point of attachment to the safety valve. Branches, particularly when full lift

Contd...

safety valves are mounted on them, should be radiused at the inlet. The in let and outlet flanges shall be drilled in accordance with the approximate table in Appendix E, for the diameters of flanges adopted".

Regulation No.302.

In clause (b), after the first sentence, the following shall be inserted, namely:-

Interference with load on the spring, after the safety valve has been adjusted, shall be prevented by the fitting of a ferrule under the adjusting screw collar or by using a lock nut on the adjusting screw which shall be further safeguarded by means of a padlock or other suitable device".

Regulation No.306.

After regulation 306, the following new regulation shall be inserted, namely :-

"306A. Adjustment of safety valve set pressure. The set pressure of a safety valve may be adjusted using air or other gas as the test medium provided that the safety valve has been subjected previously to hydraulic test in accordance with the requirement of clause (a) of regulation 290".

Regulation No.307.

In clause (a), after the last sentence, the following shall be inserted, namely :-

"All the springs above 16mm bar diameter shall be formed hot and the springs below 16mm bar diameter shall be formed hot or cold. The springs shall be suitably hardened and tempered".

Regulation No.316.

For clause (a), the following shall be substituted, namely :-

"(a) The stop valve connecting the boiler or super heater to the steam-delivery pipe shall be located as near the out-let from the final super-heater header as is convenient and practicable or in case of boilers without

super-heaters as close aspracticable to the drum, Where two or more boilers are connected with a steam receiver or any other vessel, a steam stop valve shall be fitted between the boiler and such receiver or Vessel."

Regulation No.327.

The following regulation shall be substituted, namely :-

"327. Dials-

(a) For pressure upto and including 35kg/cm^2, pressure guage dial shall be graduated in kg/cm^2 from Zero the to twice the pressure as nearly as may be practicable.

(b) For pressure exceeding 35kg/cm^2 the range of the graduation shall be from Zero to one and a half times the maximum permissible working pressure as nearly as may be practicable, but in no case shall the maximum graduation on the guage be less than 70kg/cm^2.

(c) The scale on the dial shall be clearly and permanent marked in kg/cm^2.

(d) The dial of each pressure guage shall have to be marked upon it in red, the maximum permissible working pressure.

(e) Where the guage is compensated for a head of water between the guage and the boiler connection, the amount of such compensation shall be marked on the dial. Pressure guage shall be calibrated within an accuracy of ± 1%. Boiler pressure guages shall not be less than 150mm in diameter.

(f) The travel of the pointer of the dial guage shall not exceed 325°C.".

Regulation No.330.

The following regulation shall be substituted, namely :-

"330. Test Connections-Inspector's Pressure Guage Attachment Every boiler shall be fitted with a valve or cock carrying in a vertical position a receiving screw for attachment of the Inspector's pressure guage. The receiving socket shall be tapped for M20x1.5 metric threads and shall be fitted with an easily removable cap.".

Regulation No.332.

For clause (d), the following shall be substituted, namely :-

"(d) Arc welded butt joints shall be made by the metallic shielded arc process and post weld heat treated effectively except in the following cases :

for alloy steel.

(i) in case of 0.5 Molybdenum steels if thickness does not exceed 13 mm and outside diameter doesnot exceed 127 mm.

(ii) In case of 1 Chromium 1/2 Molybdenum steel if thickness does not exceed 13 mm and outside diameter does not exceed 127 mm and pre-heated to 125°C.

(iii) In case of 2¼ Chromium 1 Molybdenum steel, post weld heat treatment is not necessary under the following conditions :
(1) a maximum specified chromium content of 3.0%.
(2) a maximum nominal outside diameter of 102 mm.
(3) a maximum thickness of 8 mm.
(4) a maximum specified Carbon content of 0.15%.
(5) a minimum pre-heat temperature of 150°C.".

Regulation No.338.

For clause (a), the following shall be substituted, namely :-
(a) The working pressure of the tubes shall be determined by the following formula :-

$$W.P = \frac{2f\,(T - C)}{(D - T + C)} \quad \text{.....Eqn. (87)}$$

Where,
T = minimum thickness of tubes, that is, nominal thickness less the permissible negative tolerance in mm. (inch)
C = 0.75 mm for working pressure upto and including 70kg/cm^2.
orC= 0 for working pressure exceeding 70 kg/cm^2 (1000 lbs/sq.in
W.P.= Working pressure of boiler in kg/cm^2 (lbs/sq. inch)
D = external diameter of tube in mm (inch)

f = permissible stress for the material at the working metal temperature in kg/cm^2 (lbs/sq. inch) to be determined on the basis given below :-

The working metal temperature shall be taken as :-

(a) For integral economiser tubes, the maximum water temperature for which the part of the element is designed plus 11°C (20°F)

(b) For furnace and boiler tubes, the saturation temperature corresponding to the working pressure plus 28°C (50°F)

(c) For convection superheater tubes, the maximum steam temperature for which the part of the element is designed plus 39°C (70°F)

(d) For radiant superheater tubes the designed maximum steam temperature plus 50°C (90°F).

"Permissible working stress for tubes :-
For temperatures at or below 454°C,

$$\frac{T.S.}{2.7} \text{ or } \frac{Et}{1.5} \text{ whichever is lower.}$$

For temperatures above 454°C,

$$\frac{Sr}{1.5} \text{ or } Sc \text{ whichever is lower.",}$$

Where,

T.S. = Minimum tensile strength of the material at room temperature

Et = Yield point (0.2% Proof stress) at working metal temp."t

Sr = the average stress to produce rupture in 100,000 hours and in no case more than 1.33 times the lowest stress to produce rupture at the working metal temperature.

Sc = the average stress to produce an elongation of 1% (creep in 100,000 hours, at the working metal temp".

Regulation No.343.

After sub-regulation (2), the following sub-regulation shall be sub inserted, namely :-

"(3) Notwithstanding anything contained in Chapter VIII, the

hydraulic test for pipes in maker's premises may be dispensed with by the Inspecting Authority provided these pipes are fully tested by approved radiographic or ultrasonic techniques; but this dispensation shall not apply to pipes having an internal diameter greater than 600mm.

In the event of a detection of any defect after conducting hydraulic test of these pipes at site, it shall be the responsibility of the manufacturer to repair or replace the defective pipes, as may be deemed necessary by the Inspecting Authority".

"(4) Electric fusion welded pipes in which the butt welds are fully radiographed or ultrasonically tested need not be hydraulically tested in the shops provided the pipe system as a whole is hydraulically tested at site to the requisit test pressure in accordance with regulation 374.

(5) In the case of fusion welded pipes test plates to represen all welded seams shall be attached at each end of longitudinal seam and tested in accordance with the requirements of Chapter XII except that one test plate may represent a lot of pipes upto 60 meters in length and of the same ~~heat treatment~~ grade of material and same thickness of the pipe subject to the same heat treatment".

Regulation No. 344.

Clause (e) shall be omitted.

Regulation No.347.

(i) In Table 1, for the columns with headings "Sulphur maximum" and "Phosphorus maximum" and related entries, the following shall be substituted, namely :-

"

Sulphur percent max.	Phosphorous percent max.
0.06	0.06

".

(ii) After clause (e), the following shall be inserted, namely :-

"(f) Test for valves and fittings :- As per requirement of

Regulation No.350.

(1) The following regulation shall be substituted, namely :-

"350. Steel pipes:-

The maximum working pressure allowed on steel pipes shall be determined by the following formula;

(a) Where the outside diameter is the basis for calculation.

$$W.P. = \frac{2fe\ (t-c)}{D-t+c} \quad \text{.....Equation 91}$$

(b) Where the inside diameter is the basis for calculation.,

$$W.P. = \frac{2fe\ (t-c)}{d+t-c} \quad \text{.....Equation 91A}$$

Where t = Minimum thickness

W.P.= Maximum working pressure

"f= allowable stress determined on the following basis :

(i) For temparatures at or below 454°C, the lower of the following two values :

$$f = \frac{Et}{1.5} \text{ or } \frac{R}{2.7}$$

(ii) for temparatures above 454°C, the least of the following three values :

(a) $\frac{Et}{1.5}$ (b) $\frac{SR}{1.5}$ (c) Sc

where t=working metal temperature

R=minimum tensile strength of the steel at room temperature

Et=Yield point (0.2% proof stress at the temperature t)

Sc = The average stress to produce an elongation of 1% (creep) in 100,000 hours at temperature t

SR = The average stress to produce rupture in 100,000 hours at the temperature t and in no case more than 1.33 times the lowest stress to produce rupture at the temperature.".

D = Outside diameter of pipe

d = Inside diameter of pipe

"e = Efficiency factor

= 1.0 for seamless and for electric resistance welded steel pipes and for electric fusion welded steel pipes complying

with the requirements of Chapter II in which the weld is fully radiographed or ultrasonically tested.

= 0.95 for electric fusion welded steel pipes complying with the requirements of Chapter II,

= 0.90 For welded steel pipes for values of t upto and including 22mm.

= 0.85 for welded steel pipes for values of t over 22mm and upto and including 29mm.

= 0.80 for welded steel pipes for values of t over 29mm.

C = 0.75mm.".

(ii) In table (3), for the figures "554°C" the figures "454°C" shall be substituted.

Regulation No.352.

The following regulation shall be substituted, namely :-

352. Copper pipes:-(a) The material shall comply with regulation 35. (b) Copper pipes may be used for maximum design pressure and temperatures as given in the Table below:

TABLE: Maximum Design Pressure and Temperature for Copper pipes

Material	Nominal size	Maximum design pressure	Maximum design temperature	Form
Solid drawn copper pipes (Steam)	Upto and including 127 mm.	17.5 kg/cm^2	207°C	Straight or Bend
	Above 127 mm and including 203 mm	12.3 kg/cm^2	207°C	
Solid drawn copper pipes (feed)	Upto and including 203 mm	21 kg/cm^2	149°C	

(c) Copper pipes shall not be used for superheated steam.

(d) The maximum working pressure on such pipes shall be deter-mined

$$WP = \frac{200 \times S \times t}{D - t} \quad \text{.....Eqn. (93)}$$

Where,

WP = working pressure in kg/mm^2

t = minimum thickness of tubes, that is nominal thickness less the permissible negative tolerance in mm.

D = Outside diameter of pipe in mm.

S = maximum permissible design stress at the appropriate maximum design temperature in kg/mm^2

(See the Table below)

Maximum Design Stress Value of S for Copper pipes
(in kg. per sq.mm)

Maximum design stress for temperature not exceeding				
66°C	121°C	149°C	177°C	207°C
4.9	4.31	3.5	2.66	1.75

Note : Where the conditions of services are such that corrosion, erosion or mechanical damage to the surface of tubes may occur, an appropriate thickness allowance shall be added to the minimum thickness of the tube".

Regulation No.352.

(i) For clause (c), the following shall be substituted, namely :-

"(c) Heat treatment after welding - Types 1,2,3,4,5 Carbon steel type flanges welded on by the metal arc process shall have the welds stress relieved where the design depth of the weld recess is greater than 20 mm".

(ii) In clause (e), for sub-clause (i), the following shall be substituted, namely :-

"(i) Stress relieving:-(a) For Carbon Steel, a stress relieving heat treatment shall be performed by heating the part to at least 600°C ± 20°C.

When required by the characteristics of the material, different

temperature may be necessary to obtain appropriate stress-relieving. The part to be stress-relieved shall be brought, slowly upto the specified temperature and held at that temperature for a period proportionate on the basis of at least two and half minutes per millimeter of the maximum thickness of the part (approximately one hour per twenty six millimeter of the thickness) and shall be left to cool in the furnace to a temperature which, for parts with the thickness greater than 20 millimeter does not exceed 400°C. After withdrawal from the furnace, the part shall be moved to a still atmosphere. A temperature time diagram of the stress-relieving process shall be provided when the inspecting Authority requires it.

Note: Other stress relieving heat treatments at a temperature as low as 550°C may be adopted, provided attention is given to the holding time in order to ensure a specific degree of stress relieving.

(b) For alloy steel, a stress relieving heat treatment shall be carried out on the basis of the composition of the alloy as shown in the table below :-

Type of steel	Range of Temperature	Time at temperature per 20 mm of thickness of plate
1/2 Mo 1/2 Cr 1/2 Mo	620° - 650°C	1 hour (1 hour min.)
1 Cr 1/2 Mo 1 1/4 Cr 1/2 Mo	620° - 660°C	1 hour (1 hour min.)
2 1/4 Cr 1 Mo	650°C- 750°C	1 hour (1 hour min.)

(c) Stress relieving shall be carried out by any of the following methods :-

(1) Local heating using a portable muffle furnace, induction coils or other suitable appliances. Particular care shall be taken to apply heat uniformally over the area to be treated. The use of procedures that do not provide adequate control for this purpose such as manual operation gas torches is not permissible. The temperature shall be measured by the thermocouples pinned, welded or otherwise suitably

attached to the surface of the pipe and where necessary, protected from flame impingement.

(2) Heating in a stationary industrial furnace. The temperature of the joint shall be measured by thermocouples so disposed within the furnace as to give a true measure of the joint temperature".

Regulation No.360.

(i) For clause (b), the following shall be substituted, namely :-

"Where carbon steel socket welded pipes or valves and fittings are welded together, such welds shall be effectively stress-relieved when the wall thickness is 20mm or greater or carbon content of the steel exceeds 0.25% or pipes are made of alloy steel in accordance with the following.".

(1) For carbon steel, a stress relieving heat treatment shall be performed by heating the part to at least 600± 20°C.

When required by the characteristics of the material, different temperatures may be necessary to obtain proper stress-relieving. The part to be stress relieved shall be brought slowly up to the specified temperature and held at that temperature for a period proportionate on the basis of at least 2½ minutes per millimeter of the maximum thickness of the part (approximately one hour per twenty five millimeter of thickness) and shall be left to cool in the furnace to a temperature which, for parts with thickness greater than 20 millimeter does not exceed 400°C. After withdrawal from the furnace, the part shall be allowed to cool in a still atmosphere.

A temperature-time diagram of the stress-relieving process shall be provided when the Inspecting Authority requires it.

(2) For alloy steel a stress-relieving heat treatment shall be carried out on the basis of the composition of the alloy as shown in the table below:-

TABLE.

Type of steel	Range of Temperature	Time at temperature per 25mm of thickness of plate

1/2 Mo 1/2 Cr 1/2 Mo	620°C - 650°C	1 Hour (1 hour Min.)
1Cr 1/2 Mo 1¼ Cr 1/2 Mo	620°C - 660°C	1 Hour (1 hour min.)
2¼ Cr 1 Mo	625°C - 750°C	1 Hour (1 hour min.)

Note : This wide range for the post-weld heat treatment temperature is necessary because of the marked dependence of the mechanical properties of this steel on the tempering temperature. In production a definite temperature with a tolerance of ± 20°C. would be selected to ensure that the mechanical properties upon which the desi n was based are in fact achieved.

Heat treatment shall be carried out by one of the following methods:

(i) Local heating using a portable muffle induction coiles, or other suitable heating appliance. Particular case shall be taken to apply heat uniformly over the area to be treated. The use of procedures that do not provide adequate control for this purpose, such as manual operation of gas torches, is not permissible. The temperature shall be maintained symmetrically over peri-pheral band of metal of a minimum width of three times the width of the butt welded preparation The temperature shall be measured by thermocouples pinned, welded or otherwise, as suitably attached to the surface of the pipe and where necessary, protected from flame impeingement.

(ii) Heating in stationary furnace. The temperature of the joint shall be measured by thermo couples so disposed within the furnace as to give a true measure of the joint temperature".

(ii) For clause (e), the following shall be substituted, namely :-

"(e) Socket weld joints :-

Socket weld joints may be used with carbon and low alloy steel pipes not exceeding 60.3 mm outside diameter. Such welds shall not be used where fatigue, severe erosion or

crevice corrosion is expected to occur. The working pressure of the socket weld fittings shall be determined in accordance with equation 91 (regulation 350). The thickness of the socket weld fittings shall not be less than 1¼ times the nominal thickness of pipe. The material shall be compatible with the associated piping".

Regulation No.361.

(i) For clause (a) the following shall be substituted, namely :-

(a) Pipes of thickness determined in accordance with equation 91 with increase of 12.5% shall not be bent to radii less than those given in the following Table. Where smaller radii are necessary, further allowance shall be made for thinning at the back of the bend except where it can be demontrated to the satisfaction of the Inspection Authority that the use of tb will not reduce the thickness below t at any point after bending.

Where t = min. thickness as per Eq. 91
tb= min. thickness before bending.

TABLE: Minimum bending radii for pipes of thickness determined in accordance with clause (a) of regulation 361.

Outside diameter	Radii measured to Centre line of pipe	
	tb = 1.125 t all thicknesses	tb = 1.1 t tb = 34.92mm or above mm
mm	mm	
1	2	3
20.9	63.5	
33.7	76.2	
42.4	101.6	
48.3	114.3	
60.3	152.4	
76.1	190.5	
88.9	228.6	
101.6	266.7	
114.3	304.8	

139.7	381.0	
152.4	431.8	
168.3	457.2	
193.7	635.0	
219.1	711.2	
244.5	812.8	1143.0
273.0	1016.0	1270.0
298.5	1117.0	1397.0
323.9	1219.2	1524.0
355.6	1498.6	1778.0
406.4	1727.2	2032.0
457.0	2032.0	2086.0

(ii) After clause (b), the following shall be inserted, namely :-

"(c) Fabricated pipe bends may be made by welding together bevelled section of straight pipe, provided:-

(i) the angle between the axis of the adjoining sections does not exceed 30° and

(ii) the thickness is at least: $\frac{K - 0.5}{K - 1}$ times the minimum thickness required for the straight pipe to which the bend is joined

Where, K = ratio of the radius of the bend (from centre of curvature to centre of pipe) to the inside radius of the pipe.

Note: Gusseted Bends shall be used for pressure not exceeding 21 kilogrammes per square centimetre and temperature not exceeding 260 Degree Centigrade.

"(d) For the forged bends, the radii shall be not less than those given below:-

Long radii forged bends - R = 1.5 x d

Short radii forged bends - R = 1.0 x d

The thickness at any point of the bend shall not be less than 87.5% of the nominal thickness of the bend. The thickness at any point of the bend shall be such that the minimum thickness required by equation 91 is maintained throughout after finishing operation.

After regulation 361, the following new regulation shall be inserted, namely :-

"361A. Butt-welding fittings.

The Butt-welding fittings shall con-form to the dimension and tolerances given in the table given below:-

DIMENSIONS OF CAPS

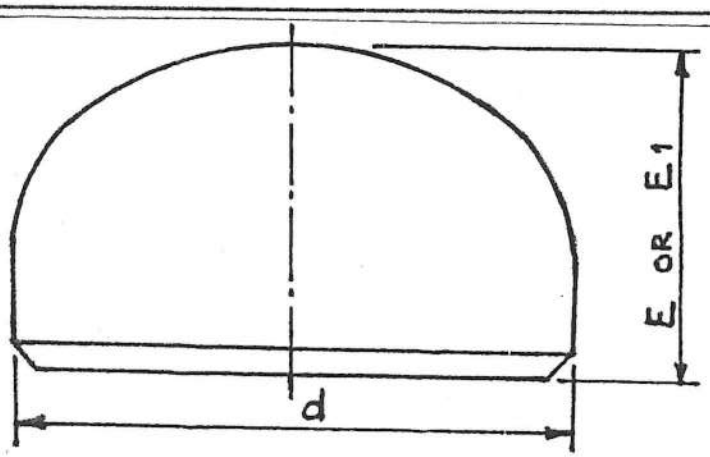

1	2	3	4	5
Nominal pipe size	Diameter d	Length E (See Note 2)	Limiting wall thickness for Length E	Length E_1 (See Note 3)
20	26.9	25	3.91	25.4
25	33.7	38	4.55	38.1
32	42.4	38	4.85	38.1
40	48.3	38	5.08	38.1
50	* 60.3	38	5.54	44.5
65	76·1 / 73·0	38	7.01	50.8
80	88.9	51	7.62	63.5
100	114.3	64	8.56	76.2
125	*139·7/141·3	76	9.53	88.9
150	168.3	89	10.97	102
200	219.1	102	12.70	127
250	273	127	12.70	152
300	323.9	152	12.70	178
350	355.6	165	12.70	191
400	406.4	178	12.70	203
450	457.2	203	12.70	229
500	508	229	12.70	254
600	609.6	267	12.70	305
700	720	267		
800	820	267		
900	920	267		

* Required O.D to be specified

Notes :-

1. Caps are to be of semi-ellipsoidal shape and are to have a length of straight to make the overall length as specified in Columns 3 and 5. The height of the semi-ellipsoidal portion, measured externally, is to be not less than one quarter of the internal diameter of the cap.
2. Lengths E apply to caps of wall thicknesses not exceeding those given in Col. 4.
3. Lengths E_1 apply to caps of wall thicknesses greater than those given in Col. 4.
4. d = Outside diameter in mm.

   E or E_1 = Overall length.

TOLERANCE OF STEEL BUTT WELDING FITTINGS

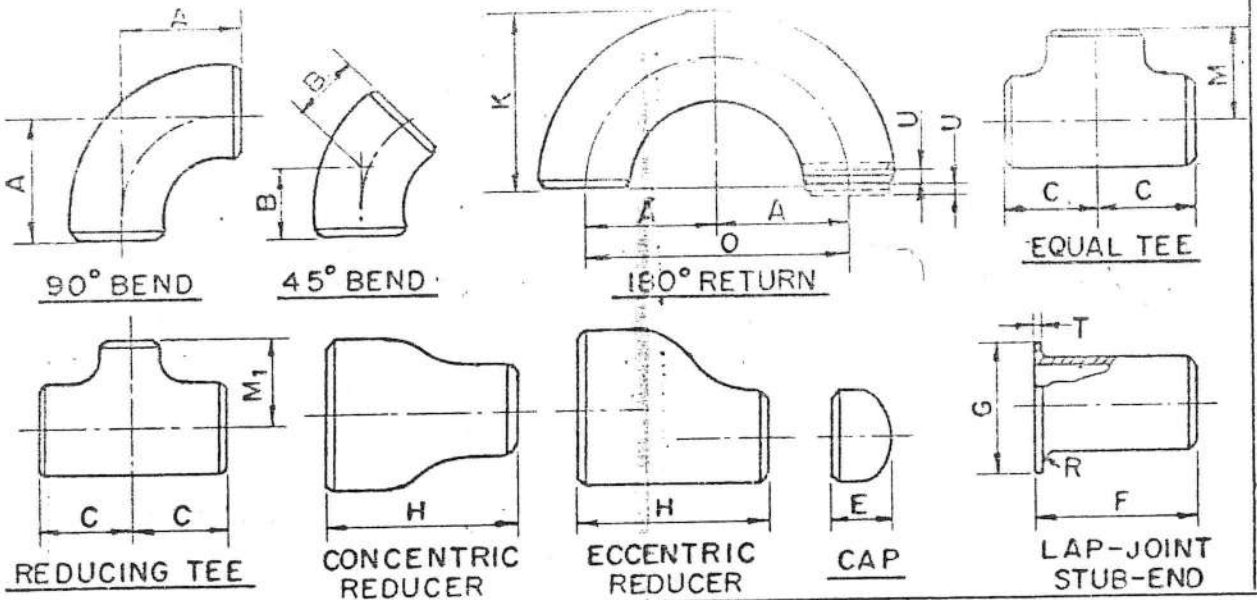

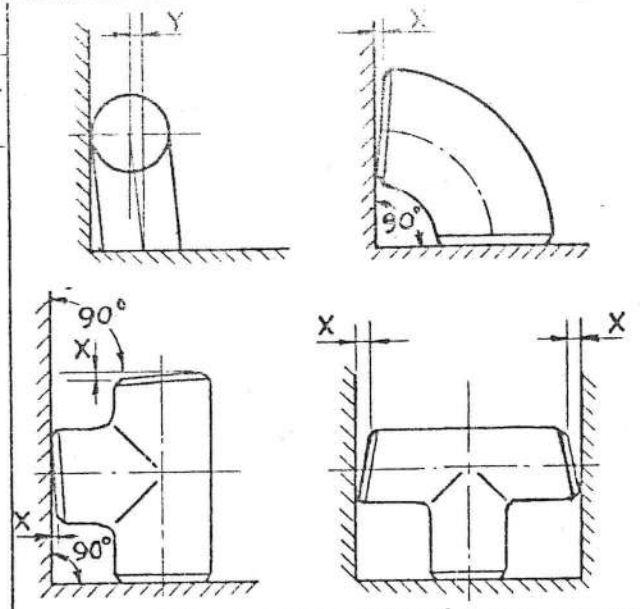

All Fittings				90° & 45° Elbows and Tees	Reducers	180° Returns			Caps	Lap-joint stub-end			
DN	O.D. at bevel	I.D. at end	Wall thickness	Centre to end A,B,C M,M1	Over all length H	Centre to centre O	Back to face K	Alignment of end U	Over all length E	End to end F	Radius R	Dia. of lap G	Thickness of lap T
15 to 65	+1.6 −0.8	±0.8	Not less than 87½% of nominal thickness	±1.6	±1.6	±6.4	±6.4	±0.8	±3.2	±1.6	+0 −0.8	+0 −0.8	+1.6 −0
80 to 90	±1.6	±1.6		±1.6	±1.6	±6.4	±6.4	±0.8	±3.2	±1.6	+0 −0.8	+0 −0.8	+1.6 −0
100	±1.6	±1.6		±1.6	±1.6	±6.4	±6.4	±0.8	±3.2	±1.6	+0 −1.6	+0 −0.8	+1.6 −0
125 to 200	+2.4 −1.6	±1.6		±1.6	±1.6	±6.4	±6.4	±0.8	±6.4	±1.6	+0 −1.6	+0 −0.8	+1.6 −0
250 to 450	+4.0 −3.2	±3.2		±2.4	±2.4	±9.5	±6.4	±1.6	±6.4	±2.4	+0 −1.6	+0 +1.6	+1.6 −0
500	+6.4 −4.8	±4.8		±2.4	±2.4	±9.5	±6.4	±1.6	±6.4	±2.4	+0 −1.6	+0 −1.6	+1.6 −0

"OFF-SQUARE" TOLERANCES

Nominal size of Fitting	"Off-square" Tolerance, X	"Off-square" Tolerance, Y
Upto and including 100	0.8	1.6
125 to 150	1.2	2.4
200 to 600	1.6	3.2
>600	3.2	6.4

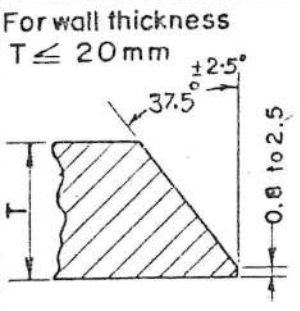

Fig. 28 (IX)

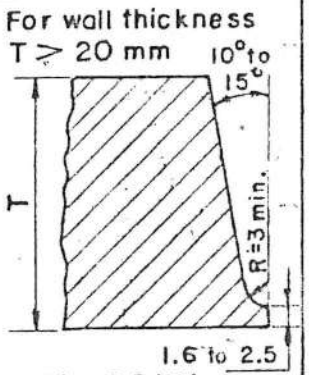

Fig. 28 (X)

STEEL BUTT WELDING TEES

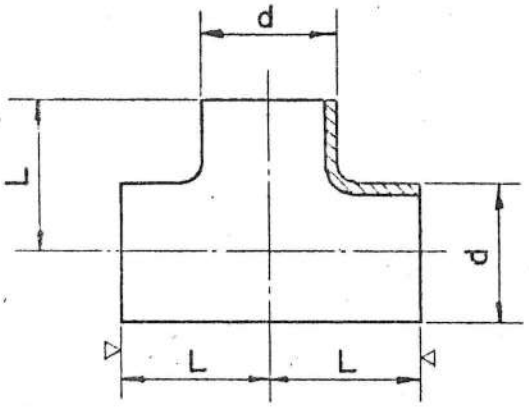

EQUAL TEE

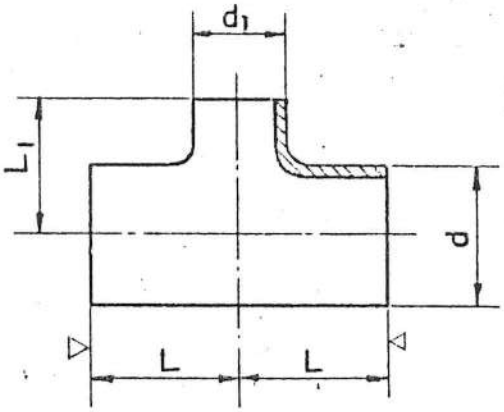

UNEQUAL TEE

Nominal Diameter	External Diameter d	External Diameter d_1	L	L_1
25 × 25 × 10	33·7	17·2	38	38
25 × 25 × 15		21·3		
25 × 25 × 20		26·9		
25		—		
32 × 32 × 15	42·4	21·3	48	48
32 × 32 × 20		26·9		
32 × 32 × 25		33·7		
32		—		
40 × 40 × 15	48·3	21·3	57	57
40 × 40 × 20		26·9		
40 × 40 × 25		33·7		
40 × 40 × 32		42·4		
40		—		
50 × 50 × 20	60·3	26·9	64	45
50 × 50 × 25		33·7		51
50 × 50 × 32		42·4		57
50 × 50 × 40		48·3		60
50		—		—
65 × 65 × 25	* 76·1 73·0	33·7	76	57
65 × 65 × 32		42·4		64
65 × 65 × 40		48·3		67
65 × 65 × 50		60·3		70
65		—		—
80 × 80 × 25	88·9	33·7	86	67
80 × 80 × 32		42·4		70
80 × 80 × 40		48·3		73
80 × 80 × 50		60·3		76
80 × 80 × 65		76·1		83
80		—		—

Nominal Diameter	External Diameter d	External Diameter d_1	L	L_1
100 × 100 × 40	114·3	48·3	105	86
100 × 100 × 50		60·3		89
100 × 100 × 65		76·1		95
100 × 100 × 80		88·9		98
100		—		—
125 × 125 × 50	* 139·7 141·3	60·3	124	105
125 × 125 × 65		76·1		108
125 × 125 × 80		88·9		111
125 × 125 × 100		114·3		117
125		—		—
150 × 150 × 50	168·3	60·3	143	121
150 × 150 × 65		76·1		121
150 × 150 × 80		88·9		124
150 × 150 × 100		114·3		130
150 × 150 × 125		139·7		137
150		—		—
200 × 200 × 80	219·1	88·9	178	152
200 × 200 × 100		114·3		156
200 × 200 × 125		139·7		162
200 × 200 × 150		168·3		168
200		—		—
250 × 250 × 80	273	88·9	216	184
250 × 250 × 100		114·3		184
250 × 250 × 125		139·7		190
250 × 250 × 150		168·3		194
250 × 250 × 200		219·1		203
250		—		—

Nominal Diameter	External Diameter d	External Diameter d_1	L	L_1
300 × 300 × 100	323·9	114·3	254	216
300 × 300 × 125		139·7		216
300 × 300 × 150		168·3		219
300 × 300 × 200		219·1		229
300 × 300 × 250		273		241
300		—		—
350 × 350 × 150	355·6	168·3	279	238
350 × 350 × 200		219·1		248
350 × 350 × 250		273		257
350 × 350 × 300		323·9		270
350		—		—
400 × 400 × 150	406·4	168·3	305	264
400 × 400 × 200		219·1		273
400 × 400 × 250		273		283
400 × 400 × 300		323·9		295
400 × 400 × 350		355·6		305
400		—		—
450 × 450 × 200	457·2	219·1	342·9	298·4
450 × 450 × 250		273		308
450 × 450 × 300		323·9		320·7
450 × 450 × 350		355·6		330·2
450 × 450 × 400		406·4		330·2
450		—		—
500 × 500 × 200	508	219·1	381	323·8
500 × 500 × 250		273		333·4
500 × 500 × 300		323·9		346·1
500 × 500 × 350		355·6		355·6
500 × 500 × 400		406·4		355·6
500 × 500 × 450		457·2		368·9
500		—		—

* Required O.D. to be specified.

Notes :-

1. d = Outside diameter of the run pipe and branch in case of equal tee.
2. d_1 = Outside diameter of the branch in case of unequal tee.
3. L = Distance of centre to end of run.
4. L = Distance of centre to end of branch.

STEEL BUTT WELDING REDUCERS

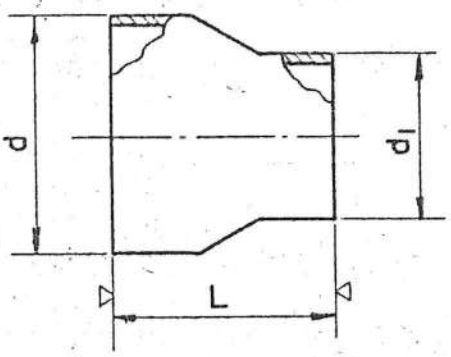

CONCENTRIC REDUCER

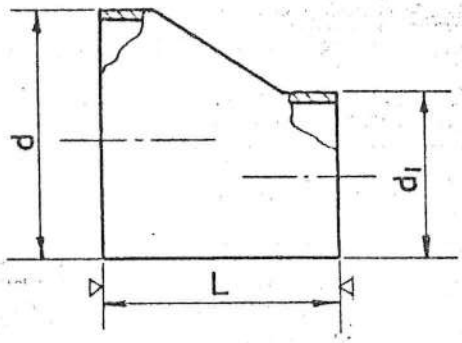

ECCENTRIC REDUCER

Nominal Diameter	Out Side Dia. d	Out Side Dia. d_1	L
25 x 10	33.7	17.2	51
25 x 15		21,3	
25 x 20		26.9	
32 x 15	42.4	21.3	51
32 x 20		26.9	
32 x 25		33.7	
40 x 15	48.3	21.3	64
40 x 20		26.9	
40 x 25		33.7	
40 x 32		42.4	
50 x 20	60.3	26.9	76
50 x 25		33.7	
50 x 32		42.4	
50 x 40		48.3	
65 x 25	*	33.7	89
65 x 32	76.1	42.4	
65 x 40	73.0	48.3	
65 x 50		60.3	
80 x 25	88.9	33.7	89
80 x 32		42.4	
80 x 40		48.3	
80 x 50		60.3	
80 x 65		76.1	

Nominal Diameter	Out Side Dia. d	Out Side Dia. d_1	L
100 x 25	114.3	33.7	102
100 x 32		42.4	
100 x 40		48.3	
100 x 50		60.3	
100 x 65		76.1	
100 x 80		88.9	
125 x 50	*	60.3	127
125 x 65	139.7	76.1	
125 x 80	141.3	88.9	
125 x 100		114.3	
150 x 50	168.3	60.3	140
150 x 65		76.1	
150 x 80		88.9	
150 x 100		114.3	
150 x 125		139.7	
200 x 80	219.1	88.9	152
200 x 100		114.3	
200 x 125		139.7	
200 x 150		168.3	
250 x 80	273	88.9	178
250 x 100		114.3	
250 x 125		139.7	
250 x 150		168.3	
250 x 200		219.1	

Nominal Diameter	Out Side Dia. d	Out Side Dia. d_1	L
300 x 100	323.8	114.3	203
300 x 125		139.7	
300 x 150		168.3	
300 x 200		219.1	
300 x 250		273	
350 x 150	355.6	168.3	330
350 x 200		219.1	
350 x 250		273	
350 x 300		323.8	
400 x 200	406.4	219.1	356
400 x 250		273	
400 x 300		323.8	
400 x 350		355.6	
450 x 250	457.2	273	381
450 x 300		323.8	
450 x 350		355.6	
450 x 400		406.4	
500 x 300	508	323.8	508
500 x 350		355.6	
500 x 400		406.4	
500 x 450		457.2	
600 x 400	609.6	406.4	508
600 x 450		457.2	
600 x 500		508.0	

* Required O.D. to be specified.

Notes :-

1. d = Outside diameter of the big end .
2. d_1 = Outside diameter of the small end .
3. L = Overall length.

STEEL BUTT WELDING FITTINGS

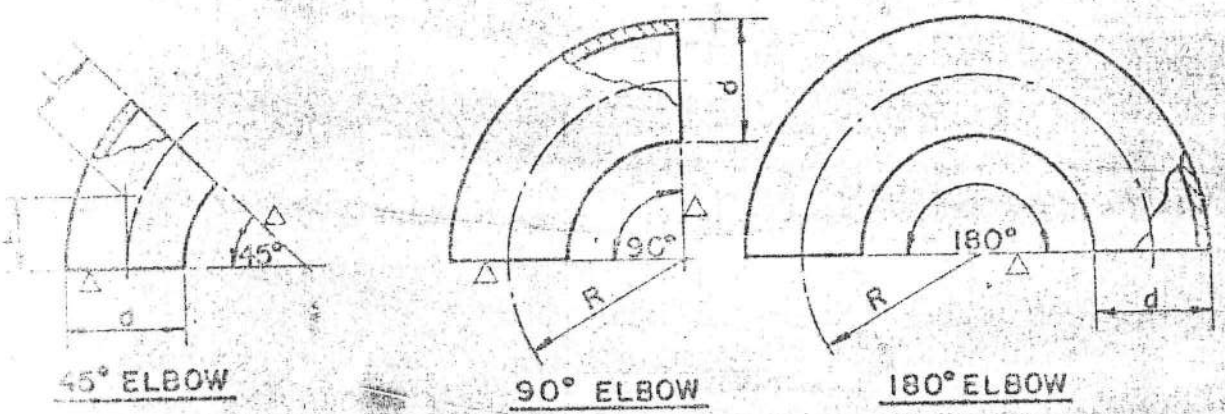

45° ELBOW 90° ELBOW 180° ELBOW

Nominal Diameter	d	R	L ≃
25	33·7	38	22
32	42·4	48	25·5
40	48·3	57	28·5
50	60·3	76	35
65	76·1 * 73·0	95	45
80	88·9	114	51
100	114·3	152	63·5
125	139·7 * 141·3	191	80
150	168·3	229	95
200	219·1	305	127
250	273·0	381	159
300	323·9	457	190
350	355·6	533	223
400	406·4	610	254
450	457·2	686	286
500	508·0	762	318
600	609·6	914·5	381

* Required O·D to be specified

NOTES :-

1. d = Outside diameter in mm.
2. R = Radius of bend in mm.
3. L = Approximate tangent length in mm.

Regulation No.362.

(i) For clause (b), the following shall be substituted, namely :-

"(b) External reinforcement:- If the thickness of the main or branches of a single or multiple branch piece is less than that given by the equation 91-A external reinforcement shall be provided. Such reinforcement may take the form of multiple radial plates of 'horse shoe' form or the form of collars or other reinforcement, approved by the Chief Inspector, applied to or around the junction between the branch and the main"

(ii) In clause (c) in equations 91-A and 91-E, for "C=1.0mm (0.04)", the following shall be substituted, namely :-

"C=0.75mm."

Regulation No.365.

(i) In sub-clause (2) of clause (b), for the first paragraph, the following shall be substituted, namely :-

"Each dished end shall be made one from rolled plate. If this is impracticable, owing to the large diameter, the dished end plate may be made from two plates fusion butt welded together, and in such cases the line of weld shall be parallel to the horizontal axis of the vessels and the weld shall be radiographed after forming. The shape of Dished End shall conform to the requirements of Regulation 275. Dishing and perepherial flanging shall be done by machine. Cold flanging shall not be adopted. All plates which have been dished, flanged, or locally heated shall afterwards be efficiently heat treated for the purpose of relieving internal stresses, unless during the last stage of manufacture, they have been uniformly heated throughout to a suitable temperature. Care shall be taken to see that the flanges are cylindrical of good surface and free from local irregularities".

(ii) In clause (f) (2), for the last paragraph beginning with the words and figures "Class I" and ending with the words and figures "Chapter XII", the following shall be inserted, namely :-

"Class I and Class II shells shall be effectively stress relieved by heat treatment when the wall thickness exceeds 20mm or the carbon content exceeds 0.25% or the pipes are made

Regulation No.370.

The following regulation shall be substituted, namely :-

"370 Flexibility :-

(a) The pipes shall be arranged so that the system is sufficiently flexible to absorb the whole of their expansion and the imposed movement of the connected equipment without the actual expansion stress (SE) exceeding the allowable stress range (SA) as is determined from the following equation:-

SA=f(1.25 SC+0.25 SH)

Where

SC = Basic material allowable stress at the minimum (Cold) temperature.

SH = Basic material allowable stress at maximum (hot) temperature.

SE = Actual calculated expansion stress obtained from the stress analysis.

f = Stress range reduction factor for cyclic conditions for total number N of full temperature cycles over the total number of years during which the systems is expected to be in operation as given in table below:-

Table:- Stress range reduction factors:

N		F
7,000 and less	..	1.0
7,000 - 14,000	..	0.9
14,000 - 22,000	..	0.8
22,000 - 45,000	..	0.7
45,000 - 100,000	..	0.6
100,000 and above	..	0.5

Note 1: Values of SC and SH shall be guaranteed by the manufacturer of steel from which pipes are made and furnished to the pipe makers/Inspecting Authority until such time such values of SC & SH are incorporated in the Regulations

Note 2: In case of imported pipes conforming to a recognised foreign standard or code the values of SC and SH may be taken from the table of allowable stress as given in that code or the values may be determined on the basis given in that code.

Note 3: The sum of the longitudinal stress due to pressure, weight and other sustained load including bending stresses caused by external loads shall not exceed the allowable stress in the hot conditions (SH). where the sum of these stress is less than SH, the difference between SH and this sum may be added to the term 0.25 SH in the above formula for determining the allowable stress range SA.

Note 4: Calculation of the expansion stress, SE shall be based on modulus of elasticity at room temperature.

(b) Where practicable, the requisite flexibility shall be provided in the layout of the pipes without having recourse to special expansion bends or expansion joints except for the safety valves discharge piping.

Where lack of space or other considerations prohibit the use of this method expansion fitting like expansion joints or the bellows type or corrugated pipes may be used provided that the limitations imposed by maximum design pressure, drainage etc., are taken into account. If the expansion fittings are used, detailed consideration shall be given to the design of anchors, guides and ties to ensure that they adequately protect the expansion fitting and accommodate the additional loads due to pressure.

(c) Notwithstanding anything contained in clause (a) of this regulation the complete analysis of the piping system may be waived if the system meets any of the following criteria;

(1) The piping system duplicates a successfully operating installation or replaces a system with a satisfactory service record.

(2) The piping system can be adjudged adequately by comparison with previously analysed system.

(3) The piping system is of uniform size with not more than two anchors and no intermediate restraints and satisfied the following approximate criteria:-

$$\frac{DY}{(L-U)^2} \leq 208$$

Where D = Nominal Pipe size in mm
Y = Resultant of movements to be absorbed by pipelines in mm
L = Developed length of line axis in metres
U = Anchor distance (length of straight line joining anchors) in metres.

Note 1: If the system is not meeting the above criteria or where reasonable doubt exists as in the adequate flexibility of the system, shall be analysed on the basis given in clause (a) of this regulation by simplified approximate or comprehensive methods of analysis that are appropriate for the specific case.

Note 2: Approximate or simplified method may be applied only if they are used for the range or configurations for which their adequate accuracy has been demonstrated.

Note 3: Data for thermal expansion, modulus of elasticity, poision's ratio, flexibility factors and stress intensity factors may be taken from any, code/specification.

Note 4: Nominal diameter and nominal thickness may be used in the calculation of expansion stress".

Regulation No.374.

(i) For clause (a), the following shall be substituted, namely :-

"(a) Each completed pipe and fitting shall be tested by hydraulic pressure as per requirement of Chapter II.".

(ii) For clause (c), the following shall be substituted, namely :-

"(c) The piping system shall, after erection, be subjected to a hydrostatic test pressure. The hydrostatic test pressure at any point in the piping system shall not be less than 1.5 times the design pressure but shall not exceed the maximum allowable test pressure of any non-isolated components such as vessels, pumps or valves. At no time during the hydrostatic tests shall any part of the piping system be subjected to a stress greater than 90% of its yield strength (0.2% off set) at test temperature.".

(iii) After clause (d), the following shall be inserted, namely :-

"(e) Hydraulic testing of butt welded and socket welded joints shall be conducted either at maker's work or at user's premises on completion of fabrication of pipes by the Inspecting Authority".

(iv) After clause (e), the following shall be inserted, namely :-

"(f) Hydrostatic test for fabricated pipes shall be as per requirements of Chapter II.".

Regulation No.379.

(i) For clause (a), the following shall be substituted, namely :-

"(a) Subject to the provision of sub-regulation (e) of regulation 381, every boiler shall be hydraulically tested after erection on site in the presence of the Inspector to 1½ times the design pressure without indication of weakness or defect. If the process of manufacture has not permitted the hydraulic test of the component in the manufacturer's plant, the test on completion shall in any case be taken to 1½ times the design pressure. The hydrostatic test pressure shall be maintained for a sufficient period to permit complete examination by the inspector".

(ii) For clause (l), the following shall be substituted, namely :-

"(l) A hydraulic test shall also be taken before granting an increased pressure certificate and after repairing a boiler. However, in the case of minor repairs to the Water Tube boilers where NDT has been carried out, hydraulic testing may be dispended with provided NDT is carried out by an approved method.".

Regulation No.380.

In clause (c), for para 2, the following shall be substituted, namely :-

"In the case of water tube boiler or boilers fitted with super

heaters, the feed water connection and stop valve need not be shut off and if the total safety valve area is lifted and found to be adequate by calculations, the requirement of the accumulation test may be assumed to have been satisfied if the valves are or have been found so adjusted that at least one safety valve on each boiler shall lift at or below the designed working pressure of the boiler and all valves shall lift so that all steam which can be generated by the boiler can be discharged with a pressure rise not exceeding 10% of the designed working pressure".

Regulation No.382.

(i) In clause (a), in the list of States/Union Territories with their distinguishing letters, after the entry

"Gujarat.....GT", the following shall be inserted:-
"Haryana.....HA".

(ii) After the heading 'Orissa' and the entry relating thereto the following shall be added -

"Pondicherry.....PY".

(iii) In the list of State/Union Territory with their distinguishing letters -

(a) The entry "Madras....M" shall be omitted; and

(b) After the entry 'Rajasthan.....RJ", the following entry shall be inserted -

"Tamil Nadu.....T".

Regulation No.384.

For the words "feet" and "figure" the words "metres" and "number" shall respectively be substituted.

Regulation No.385.

The following regulation shall be substituted, namely :-

"385. Registration fee:- The required fee to accompany an application under sub-section (1) of Section 7 of the Act shall be:-

	Rs.
For Boiler Rating not exceeding 10	105
For Boiler Rating exceeding 10 but not exceeding 30	130

For Boiler Rating exceeding	30	but not exceeding	50	150
For Boiler Rating exceeding	50	but not exceeding	70	180
For Boiler Rating exceeding	70	but not exceeding	90	210
For Boiler Rating exceeding	90	but not exceeding	110	240
For Boiler Rating exceeding	110	but not exceeding	200	270
For Boiler Rating exceeding	200	but not exceeding	400	315
For Boiler Rating exceeding	400	but not exceeding	600	360
For Boiler Rating exceeding	600	but not exceeding	800	405
For Boiler Rating exceeding	800	but not exceeding	1000	450
For Boiler Rating exceeding	1000	but not exceeding	1200	540
For Boiler Rating exceeding	1200	but not exceeding	1400	600
For Boiler Rating exceeding	1400	but not exceeding	1600	675
For Boiler Rating exceeding	1600	but not exceeding	1800	750
For Boiler Rating exceeding	1800	but not exceeding	2000	825
For Boiler Rating exceeding	2000	but not exceeding	2200	900
For Boiler Rating exceeding	2200	but not exceeding	2400	975
For Boiler Rating exceeding	2400	but not exceeding	2600	1050
For Boiler Rating exceeding	2600	but not exceeding	2800	1125
For Boiler Rating exceeding	2800	but not exceeding	3000	1200

Above 3000 for every 200 or part thereof an additional fee for Rs.40/- shall be charged.

Provided that the Chief Inspector, may direct that no fee shall be payable in respect of a fresh application made in pursuance of sub-section (2) of section 14 of the Act.".

After Regulation 387, the following new regulation shall be inserted, namely :-

387A. MAINTENANCE OF RECORDS.-

(a) "The Inspecting Authority shall maintain the records pertaining to the boiler or the Economiser, as the case may be, including all the certificates in the prescribed forms, namely Form II, Form III, Form III-A, Form III-B, Form III-C, Form IV, Form IV-A and Form VIII and the copies of the approved drawings for a period of at least 3 years after registration of the boiler. Thereafter these records may be sent to the owner of the boiler by the Inspecting Authority.

(b) The owner of a boiler or economiser shall maintain the records pertaining to the boiler or economiser, as the case may be, including the certificates in Forms II, IIIA, IIIB, IV and VII and the copies of the approved drawings for the entire life of the boiler or economiser as the case may be.

(c) In the event of any transfer of the ownership, the records mentioned above shall be transferred to the new owner and the new owner will maintain the record in accordance with the provision of clause (b) above.

(d) The manufacturer of boiler or economiser or steam pipe shal maintain the record pertaining to the boiler or economiser or steam pipe, as the case may be, including the certificat in Form II, III-A, III-B, III-C, IV, IV-A, VII and VIII and the copies of the approved drawings for a period of at least 5 years.".

After Regulation 391, the following new regulation shall be inserted, namely :-

"391A. Requirements of tests of old boilers :-

(a) When a boiler is 50 years old from the date of its registration, following tests shall be carried out by the Chief Inspector in order to satisfy himself about the suitability of such boiler for further use

(1) Physical Tests

(2) Chemical Tests,

(3) Metallographic tests.

The above mentioned tests shall be carried out in the National Metallurgical Laboratory, Jamshedpur, the National Physical Laboratory Delhi, the Central Mechanical Engineering Research Institute, Durgapur, The National Test House, Alipur or Sewri or in any reputed test house.

(b) Where, however, the tests are carried out in a laboratory other than the Laboratories mentioned in sub-regulation (a), the test shall be carried out in the presence of the Chief Inspector or Deputy Chief Inspector or Inspector as may be authorised by the Chief Inspector.

(c) The number of test pieces to be cut out and the location from where test pieces are to be cut for testing shall be decided by the Chief Inspector in individual cases depending on the type and design of a boiler.

(d) When a test piece is cut out from an old boiler and the test is carried out in the laboratories mentioned in sub-regulation (a) or, as the case may be, in sub-regulation (b) a copy of the test report shall be forwarded to the Central Boilers Board by the Chief Inspector of the State concerned.

(e) For second-hand boilers which were registered after working for a certain period in railways or other organisation which are not covered under the Act the age of the boiler shall be computed from the date of manufacture of the boiler. Where the date of manufacture is not available from the records in respect of a second-hand boiler, the test specified at clause (a) shall be carried out by the Chief Inspector concerned as early as possible but within a period of the five years from the commencement of the Indian Boiler (First Amendment) Regulations, 1982.

(f) Where all the requisite documents for registration are not furnished and it is not also possible to cut tests pieces for conducting necessary tests specified at clause (a) due to design of a boiler such old boiler shall not be permitted by the Chief Inspector for further use".

Regulation No.393.

The following regulation shall be substituted, namely :-

"393. Submission of manufacturing drawings and the particulars of boilers in advance -(a) In the case of land boilers made in India for use in the States, the manufacturing drawings and the particulars of materials, design and construction of boilers shall be submitted by the Makers of the boilers to the Inspecting Authority of the State, where the principal parts of the boilers will be manufactured, for examination and approval before commencement of the manufacture of boilers.

(b) In the case of boilers made outside India for use in the State the manufacturing drawings and the particulars of the materials, design construction of boilers shall be submitted initially to the Inspecting Authority for examination and approval. Thereafter the manufacturing drawings and the particulars of materials, design and construction shall be submitted to the Chief Inspector of Boilers of the State where the boiler will be installed and used for examination and approval before commencement of manufacture so as to avoid questions arising at the examination of the finished boilers.

(c) The Inspecting Authority or the Chief Inspector or both, as the case may be, shall, after examination of the manufacturing drawings and the particulars intimate to the proposer whether they are satisfied with the materials, design, construction and fitness of the parts for the intended pressure and, if not, what modification is necessary therein. When the manufacturing drawings and the particulars of boilers have been approved, the Inspector in making his examination shall see that the design and the particulars of construction as approved have been carefully followed and that the material corresponds with the approved particulars.

(d) The fees for the scrutiny of the manufacturing drawings and the particulars of the materials, design and construction of boilers under sub-regulation (a) or (b) shall be on the scale prescribed in regulation 385. When the manufacturing drawings have been scrutinised and in respect of them alterations have been suggested and the same are resubmitted for scruting, seperate see on the same scale shall be payable if the manufacturing drawings contain alterations other than those previously suggested.".

After regulation 393, the following new regulation shall be inserted, namely :-

"393-A FEES FOR SCRUTINY OF MANUFACTURING DRAWINGS ETC."

(a) The fee for scrutiny of the manufacturing drawings and the particulars of materials, design and construction of boiler under sub-regulation (a) or (b) of regulation 393 shall be on the scale prescribed in regulation 385. When the manufacturing drawings have been scrutinised and in respect of them alteration have been suggested is resubmitted for scrutiny, seperate fee on the same scale shall be payable if the manufacturing drawings contain alterations other than those previously suggested.

(b) The procedure laid down in clause (a), above shall be followed in the case of structural alterations, addition or renewal of any part of a boiler.".

Regulation No.395.

For sub regulation (b), the following shall be substituted, namely :-

"(b) (i) The fees for examination of plans and the particulars of material, design and construction of steam pipes before the commencement of manufacture of the steam pipes shall be at the rate of Rs.10/- for 30 meters of piping or part thereof inclusive of all fittings excepting the fittings like desuperheaters, steam receivers, feed heaters and separately fired superheaters. For any fittings like de-superheaters, steam receivers, separators and flanges the fees shall be Rs.50.00 for each such fittings.

(ii)The fees for examination of lay out plans of steam pipes shall be Rs.5/- per 30 metres of piping or part thereof inclusive of all fittings, excepting fittings like de-superheaters, steam receivers, feed heaters and separately fired superheaters. For any fittings like de-superheaters, steam receivers and separators, the fee shall be Rs.50.00 for each such fittings.".

Regulation No.395A.

(i) In clause (i) of sub-regulation (1) for the word "three" the word "four" shall be substituted.

(ii) For sub-regulation (3), the following shall be substituted, namely:-

"(3) For inspection of tubes and pipes, the fees shall be charged at Rs.25/- only per metric tonne or a fraction thereof".

(iii) After sub-regulation (3), the following sub-regulations shall be inserted, namely:-

"(4) Fees for inspection of boiler at the site of construction shall be charged at the rate of four times the registration fee.".

"(5) For inspection of forged pipe fittings, the fees shall be charged at the rate specified for forged and Cast flanges under clause (1), of sub-regulation (2) of regulation 395 C.

(6) For inspection of pipe fittings other than forged pipe fittings, the fees shall be charged as under:-

(a) Upto and including 50mm, for 100kg. or a fraction thereof	Rs.25/-
(b) Over 50mm and upto and including 100mm for 450kg. or fraction thereof ...	Rs.125/-,
(c) Over 100mm for 900kg or a fraction thereof.	Rs.225/-

After Regulation No.395A, the following new regulations shall be inserted, namely :-

395B-Fees for inspection of Pipes:

"(a) For the pipes of nominal bore not exceeding 100mm inclusive of all fittings, excepting fittings like de-superheaters, steam receivers, feed heaters and separately fired superheaters Rs.100/- for 30 meters of pipe or part thereof.

(b) For pipes of nominal bore exceeding 100mm inclusive of all fittings excepting fittings like de-superheaters, steam receivers, feed heaters and separately fired superheaters Rs.250/- for 30 meters of pipe or part thereof.

(c) Fees for inspection of fittings like de-superheaters steam receivers, feed heaters and separately fired superheaters- Rs.250/- for each such fittings.

395C. Fees for inspection of Valves - Fees for inspection of valves shall be charged as under:

(1) The inspection fee for valves shall be charged as under :

a) upto and including 25 mm for a batch of 100 or part thereof Rs.225/-

b) Over 25 mm and upto and including 50mm for a batch of 25 or part thereof Rs.225/-

c) Over 50 mm and upto and including 100 mm for a batch of 25 or part thereof Rs.225/-

d) Over 100 mm and upto and including 250 mm for a batch of 10 or part thereof Rs.225/-

e) Over 250 mm for a batch of 2 or part thereof Rs.225/-

(2) Fees for inspection of flanges shall be charged as under :-

(i) For forged and cast flanges, the fees shall be charged as under:-

(a) Upto and including 25mm for a batch of 50 or part thereof Rs.60/-

(b) Upto and including 25mm for a batch of 100 or part thereof .. Rs.110/-

(c) Over 25mm upto and including 50mm for a batch of 50 or a part thereof .. Rs.120/-

(d) Over 50mm upto and including 100 for a batch of 25 or part thereof .. Rs.120/-

(e) Over 100mm upto and including 250mm for a batch of 10 or a part thereof .. Rs.130/-

(f) Over 250mm for a batch of 5 or part thereof .. Rs.150/-

(ii) for plate flanges the fees shall be charged at half the rate as charged for forged and cast flanges.",

"395D Fees for inspection of components of valves-The fees for inspection of components of valves shall be charged as under:-

(1) 50% of the Inspection fees of the valves shall be charged by the Chief Inspector of the State, where the components of the valves, are manufactured, for inspection of the components manufactured in a State other than the State where the valves are assembled

and remaining 50% of the inspection fees shall be charged by the Chief Inspector of the State, where the valves are assembled, for inspection of assembly and final inspection of the valves.

(ii) Where the inspection, so far as the material testing is concerned, has been carried out by a "Well known Foundry" or "Well known Forge" full inspection fees shall be charged by the Chief Inspector of the State where the valves have been assembled and finally tested.

(iii) Where the components of the valves are inspected and tested in the same manufacturing work where the valves are assembled and finally tested, full inspection fee shall be charged by the Chief Inspector of the State where the manufacturing works is located.

(iv) In case, in a State, components are manufactured by one firm and finally fittings and assembly of the valves are made by another, both the firms shall pay inspection fee on 50:50 basis".

395E- Fees for inspection of feed water heaters and other fittings:-

Fees for inspection of feed water heaters and other fittings shall be charged as under:-

(i) Fees for inspection of feed heater shall be equal to the registration fee of the boiler subject to a maximum of Rs.500/-

(ii) Fees for inspection of other fittings like, de-superheaters, steam receivers and separately fired superheaters shall be charged equal to half the registration fee of the boiler to which the steam pipe or feed pipe, as the case may be, is attached subject to a maximum of Rs.250/-

Note: In case of fittings, like de-superheaters, feed heaters and separately fired superheaters, which are parts of the steam pipes or feed pipes attached to a battery of the boilers, the fees shall be charged equal to half the registration fee of any one of the boiler or the battery of the boilers".

395F.-Marking:

(a) Carbon steel tubes or pipes which are both over 50mm

outside diameter or ~~is~~ over 1000mm in length shall be marked legibly to show:-

(i) The identification symbol for the type of the steel,

(ii) The brand of the manufacture, and

(iii) Whether seamless or electric resistance tubes or pipes.

(b) In the case of Carbon steel tubes or pipes less than 50mm outside diameter or less than 1000mm in length the information specified in clause (a) of this regulation shall be marked on a tag securely attached to the bundle or box.

(c) For alloy steel tubes or pipes markings shall not be stamped on the body of the tubes or pipes. The information specified in clause (a) of this regulation shall be stamped on the end face of plain-end pipes or on the rims of flanges or on indentification plates suitably attached to the pipes or tubes. Inspection or identification marks may be painted on the alloy steel tubes or pipes provided iron oxide base or titanium base paints are used.

(d) Tubes or pipes conforming to a foreign standerd or code, which have been accepted by the Board under regulation 3(2), markings shall be stamped in accordance with the provision of that standard or code, as the case may be".

ulation No.506.

For clause (b), the following shall be substituted, namely :-

"(b) On analysis, the sulphur and phosphorous content shall not exceed the following percentages :-

Components	Sulphur percent Max.	Phosphorous percent Max.
Tubes	0.15	1.00
Headers	0.15	1.00

(c) Minimum Manganese content shall be related to sulphur content by the following formula:-

(% sulphur x 1.7) + 0.3=% Manganese.

Which must be shown to be satisfied by routine quality control laboratory analysis. In any event the Manganese shall not be

less than 0.5% and shall be within the range 0.50-0.90%.

Phosphorous content shall be kept as low as economically possible but in no circumstances shall it exceed 1.0%.

Regulation No.519.

For clause (i), the following shall be substituted, namely :-

"(i) Hydraulic Test:- All valves and mountings shall withstand satisfactorily a hydraulic test to the same pressure as will be applied to the economiser during its registration".

Regulation No.532.

For the word "feet", the word "metres" shall be substituted.

Regulation No.533.

The following regulation shall be substituted, namely :-

"533. Registration fee-An application for registration of economiser shall be accompanied by appropriate fee as specified below:-

	Rs.
For Economiser rating not exceeding 50	75
For Economiser rating exceeding 50 but not exceeding 100	90
For Economiser rating exceeding 100 but not exceeding 150	105
For Economiser rating exceeding 150 but not exceeding 200	120
For Economiser rating exceeding 200 but not exceeding 250	135
For Economiser rating exceeding 250 but not exceeding 300	150
For Economiser rating exceeding 300 but not exceeding 350	165
For Economiser rating exceeding 350 but not exceeding 400	180
For Economiser rating exceeding 400 but not exceeding 450	195
For Economiser rating exceeding 450 but not exceeding 500	210
For Economiser rating exceeding 500 but not exceeding 600	225
For Economiser rating exceeding 600 but not exceeding 700	240
For Economiser rating exceeding 700 but not exceeding 800	255
For Economiser rating exceeding 800 but not exceeding 900	270
For Economiser rating exceeding 900 but not exceeding 1000	285

And above 1000 rating every 200 or part thereof, an additional fee of Rs. 15/- shall be charged".

Regulation No.534.

(i) In clause (a), the following shall be added at the end, namely :-

"The engraving shall be done within a period of two months from the date of receipt of the registry number".

(ii) After clause (b), the following clauses shall be added, namely :-

"(c) The engraving shall be completed and ready for verification within thirty days from the date of receipt of the engraving slip from the Chief Inspector of the State.

(d) Economisers having registry devices different from those prescribed in clause (a) and (b) shall have such devices crossed out or erased and engraved a new in conformity with those prescribed in the clauses aforesaid. The original numbers of such economisers shall be retained in the new device provided that in case of economisers operating in an area which consequent upon the reorganisation of state forms part of another state, new numbers shall be given by the Chief Inspector of that State. A number once allotted shall not be used again in another economiser".

Regulation No.534B.

The following regulation shall be substituted, namely :-

"534B. Submission of plans of Feed pipes - (i) The fees for scrutiny of plans and particulars of the material, design and construction of Feed Pipes, before commencement of manufacture of the feed pipes shall be at the rate of Rs.10/- per 30 metres of piping or part thereof inclusive of every fitting excepting fittings like feed water heaters. For any fitting like feed water heater the fee shall be equal to the registration fee of the boiler to which the feed pipe is attached subject to a maximum of Rs.500/-

(ii) The fees for scrutiny of layout plans of feed pipes shall be Rs.5/- for 30 metres of piping or part thereof exclusive of fittings like feed water heater. For any fittings like Feed Water heater, the fee shall be Rs. 50.00 for each such fittings".

After regulation No.536, the following new regulation shall added, namely :-

"536A. Equipment of Workshop-(a) The welding plant and equipment are to be of good quality and maintained in an efficient working condition. The welding apparatus is to be installed under cover and arranged so that welding work may be carried out in positions free from draughts and adverse weather conditions. The procedure is to be such that there is regular and systematic supervision of the welding works, and the welding operators are to be subjected by the works officials to periodic tests for quality of workmanship. Records of these tests are to be kept and are to be available to the Inspecting Officiers for scrutiny.

(b) The works should be equipped with welding plant equipment and quality control personnel. However, the equipments for destructive, non-destructive testing and heat treatment is not necessary. The manufacturer can tie-up for these facilities outside and a letter from the party with whom he makes a tie-up should be made available to the Chief Inspector of Boilers of the State. Inspecting Authority or his representative should be allowed to inspect the material in the laboratory of the party during the test.".

Regulation No.545.

In figure XII/10 and figure XII/11, below the dimension shown as "2TE", the following shall be inserted namely :-

"51mm (2 In.) Minimum.".

Regulation No.546.

(i) For clause (c), the following shall be substituted, namely :-

"(c) Longitudinal welds shall be placed at the lower part of the furnace and shall break joint in successive sections at least by 150mm".

(ii) For clause (g), the following shall be substituted, namely :-

(g) Where furnace flue is made up of plain or corrugated section or both, they may be connected to each other by fusion butt-welded circumferential seams".

"Plain furnaces shall not exceed 3m in length except in the case of reverse flame boilers, which are considered to be inherently flexible. In all other cases flexibility shall be provided in the furnace by means of corrugations or bowling hoops.

If corrugations are used to provide flexibility, at least one third of the furnace length shall be corrugated.".

(iii) After clause (j), the following shall be inserted, namely :-

"(k) Plain furnaces not fitted with stiffening ring shall not exceed 600 mm external diameter. The length of such furnaces shall not exceed six times the external diameter for furnaces with diameter upto 450 mm and four and a half time the diameter for furnaces with diameter over 450 mm.

The above mentioned limitation on the total length of furnaces not fitted with stiffening rings shall not apply to the furnaces fitted with stiffening rings.

Where furnaces are fitted with stifening rings, the spacing of the furnaces shall not be greater than 60 t where t is the thickness for the furnace plate or 900 mm whichever is smaller".

Regulation No.550.

In clause (a), after sub-clause (a) (ii) the following note may be inserted, namely :-

"Note:- Cleaning hole for the purpose of this regulation means a machined cylindrical hole having a diameter not exceeding that of bar stay by more than 2%.".

Regulation No.561.

(i) For sub-clause (viii) of clause (b), the following shall be substituted, namely :-

"(viii) Radiographic Examinations :- Every portion of the longitudinal and circumferential butt-welded seams of the shell of the boiler shall be subjected to

radiographic or ultrasonic examination. Where ultrasonic examination is used, it shall be demonstrated to the satification of the Inspecting Authority that the equipment and the technique used are satisfactory, The manufacturer shall ensure that the operator employed is competent to use the equipment, apply the technique and interpret the results of the examination. The methods employed in obtaining the radiographs shall be such as to show clearly differences equal to 2% of the thickness at the welded joints. To determines whether this result is being attained, an indicator of approved form which includes a portion equivalent to not more than 2% of the joint thickness shall be placed in the vicinity of the weld so as to make a record on each radiograph. Each section of every weld shall be marked so that the radiographs can be easily corrected to the particular part of the seam represented.

The examination shall be made from the original films and the acceptability of the welds shall be decided by the Inspecting Authority. The welds deemed unsatisfactory shall be rejected or dealt with under the condition of regulation 560 and can be radiographed again. The films shall be retained by the manufacturer for a reasonable period for reference and be available to the Inspecting Authority, if required.

Note:- (1) Magnetic particle flaw detection:- Magnetic methods of flaw detection shall be employed wherever possible for ferritic steel.

(2) Dye-penetrant flaw detection :- Dye penetrant or equivalent methods of flaw detection shall be employed for Austenetic or other non-magnetic steel".

(ii) After sub-clause (vi) of clause (c), the following shall be inserted namely :-

"(vii) Radiographic or ultrasonic examination.-Each longitudinal and Circumferential seams in class

II boiler (including shell to end plate) shall be subjected to spot radiographic or ultrasonic examination.".

(iii) For sub-clause (d), the following shall be substituted, namely :-

"(d) Test for Class III boiler.- (i) Specimens for the following tests shall be selected from the test plate or plates and stamped by the Inspecting Officer for identification.

1. One forward bend test.
2. One reverse bend test.

(ii) Radiographic or ultrasonic examination.- Each longitutlinal and circumferantial seams in class III boiler (including shell to end plate) shall be subjected to spot radiographic or ultrasonic examination.".

Regulation No.562.

The following regulation shall be substituted, namely :-

562(1) "Heat treatment- All boilers constructed to class I or Class II requirements shall be stress-relieved by heat treatment after completion of all welding and before hydraulic test if any plate is 20 mm thick or greater or carbon content of the steel exceeds 0.25% or the material used in the construction of boiler is alloy steel.".

For Carbon steel a stress relieving heat treatment shall be performed by heating part to at least 600± 20°C When required by the characteristics of the material. different temperatures may be necessary to obtain proper stress relieving. The part to be stress-relieved shall be brought slowly up to the specific temperature and held at that temperature for a period of proportionate on the basis of atleast 2½ minutes per milimetre of the maximum thickness of part (approximately one hour per 25 mm of thickness) and shall be left to cool in the furnace to a temperature which, for the parts with a thickness greater than 20 mm does not exceed 400°C. After withdrawal from the furnace the part shall be allowed to cool in a still atmoshphere. A temperature-time diagram of the stress-relieving process shall be provided for a welded shell or drum and a similar diagram for other welded pressure parts when the Inspecting Authority requires it.

During heat treatment the Official test plates shall be inside the boiler. Where the shell is subjected to a primary stress relieving treatment indentical to the final heat treatment to be given to the boiler, the test plates may be placed inside the shell during primary treatment and thereafter cut up and tested without waiting for the final treatment of the boiler.

Where the shell is not subject to primary stress relieving treatment or is subjected to primary stress relieving treatment which is not identical with the final heat treatment, the test plates may be placed inside any other boiler of comparable diamensions which is to be heat treated in accordance with this chapter.

Temperature charts shall be submitted to indicate that the test plates and the boiers they represent have been subjected to identical heating, soaking and cooling treatment.

Note: Other stress-relieving heat treatment at a temperature as low as 550°C may be adopted, provided attention is given to the holding time in order to ensure a sufficient degree of stress-relieving.".

"(2) Where the welded joint connects parts that are of different thickness, the thickness to be considered in applying the limiting thickness of 20 mm for carbon steel shall be the following nominal thickness including corrosion allowance:

(i) the thinner of two adjacent butt welded component including shell to end connection;

(ii) the thickness of the shell in connections to flats ends;

(iii) the thickness of the shell or end in nozzle attachment welds;

(iv) the thickness of the nozzle at the joint in nozzle to flange connections;

(v) the thickness of the pressure part, at the point of attachment, where a non pressure part is welded to a pressure part.".

Regulation No. 574.

In clause (i), the word "smaller" shall be omitted.

Regulation No.576.

The following regulation shall be substituted, namely :-

"576. Wide water spaces between and around tube nests- Except as specified in regulation 577 stay tubes shall be fitted in the tube nest. The working pressure of the plate in the wide water space between the tube nests shall be determined by the following formula-

$$W.P.= \frac{f1}{A^2 + B^2} \times \frac{(T-0.75)^2}{C} \times 100 \quad \text{... XII/12 Equation}$$

Where T = thickness of the tube plate in mm
WP = Working pressure in kgf/cm^2
A = Width of water space between nests (measure between centre lines of tubes in mm)
B = Pitch of tubes, in mm
f1 = 0.85 F (F as defined in regulation 271)

For stay tubes welded to the tube plates in accordance with the figures XII/69-I, XII/69-II, XII/69A-I and XII/69A-II, the value of constant C shall be taken as 0.46 for plates exposed to flame and 0.42 for plates not exposed to flame.

(1) For figure XII/69, the following figures shall be substituted namely:

Figures as on page to be printed here

Regulation No.591.

After the first paragraph, the following shall be added, namely:- "Welded gusset stays and braces may be used for welded Lancashire, Cornish and Cylindrical Horizontal Multitubular boilers provided their method of attachment is approved by the Inspecting Authority".

Regulation No.592.

After clause (d), the following shall be inserted, namely:-

"(e) Circular combusion chambers:- The thickness of circular combustion chamber of horizontal tubular boilers shall be calculated in accordance with equation XII/25 and XII/26. The maximum thickness shall not exceed 35mm (1-3/8 in) and in no case, less than 10mm (3/8 in)".

The tube ends should be tightly expanded to fill the holes.

If the end of the tube projects beyond the weld, the projecting portion, when exposed to radiant heat, should be removed after welding.

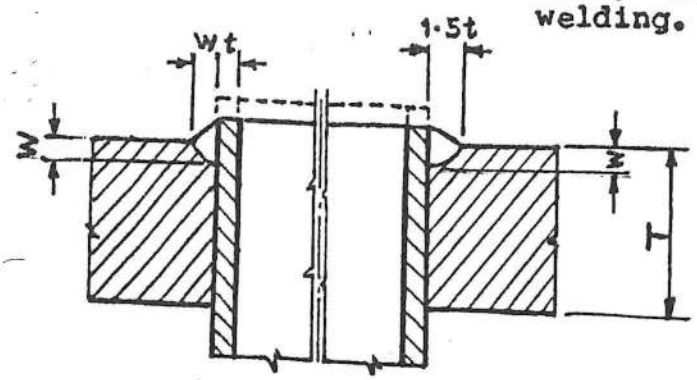

This preparation is preferred where there is a danger of burning through the tube wall due to its thinness.

XII/69/A-I XII/69/A-II

The ends of the tubes together with the reinforcing fillet welds may be removed flush with the surface of the plate, but in this case care must be taken to ensure that dimension W = t min. is maintained.

The tube ends should be tightly expanded to fill the holes.

If the end of the tube projects beyond the weld, the projecting portion, when exposed to radiant heat, should be removed after welding.

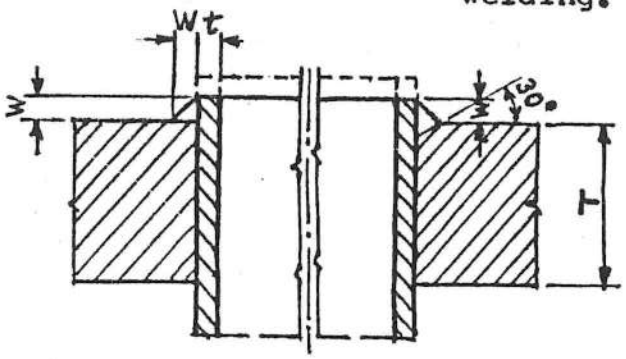

XII/69/I XII/69/II

Tube wall thickness t ≥ 3mm (1/8 inch).
Weld size W ≥ t but ≥ 5mm (3/16 inch). The minimum distance between tubes = 2.5t or 9mm (5/16 inch), whichever is lesser.

It may be necessary to deposit the weld in two runs to ensure a tight joint if the operating conditions are onerous.

After Regulation No.605, the following shall be inserted, namely :-

"605A. Issue of duplicate certificate:-

(i) In case of loss of a certificate issued to a welder in Form XIII, a duplicate certificate may be issued by the Competent Authority who issued the original certificate provided that the Competent Authority is satisfied with they genuineness of the case.

(ii) Fee for issue of duplicate certificate shall be Rs.25/-

Regulation No.602.

For clause (b), the following shall be substituted, namely :-

"(b) Re-validation of certificate - The certificate may be extended from time to time for a period not exceeding twenty-four months at a time on completion of a requalification test (see regulation No. 610) to the satisfaction of the Competent Authority. In case the welder is employed in another state at the time of re-validation of a certificate, he may appear for a re-qualification test before the Competent Authority of the State for extension of his certificate".

Regulation No.609.

In sub-clause (i) of clause (b) of regulation 609(B) 2, for the figures, words and brackets "381 mm (15 inches)", the figures and letter "300 mm" shall be substituted.

Regulation No.611.

For clause (d), the following shall be substituted, namely :-

"(d) Welded Tube Joints:- A test length approximately 203 mm long shall be cut from the tube with the welded joint disposed approximately at the centre. After visual examination, one test piece not exceeding 13mm for tubes 6 mm in thickness and below and thrice the thickness of the tube for thickness of over 6 mm shall be cut longitudinally.

The test piece shall not be less than 76 mm in length on either side of the weld. The slight excess of internal bead may be filed until it is not more than 0.8 mm proud of the general surface. The test piece shall then be bent back with the root in tension through 90 degree round a former of diameter equal to three times the thickness of the tubes. With regard to alloy steel pipes and tubes, the bend test specimen shall be bent

without being straightened, but after removal of the weld reinforcement down to the level of but not below the surface round a former of diameter 4t and through an angle of 90°. The bending may be carried out by blows or by pressure. Care shall be taken to ensure that the former is so positioned that the weld is maintained at the crown of the bend. The test specimen shall be capable of being bent through 90 degree without signs of failure, although slight premature failure at the edges of a specimen need not be considered a cause for rejection. The opening out of a slight defect due to incomplete root penetration or lack of root fusion need not be considered a cause for rejection, provided the defect has sound metal at the back and on either side of it".

Regulation No.616.

The following regulation shall be substituted, namely :-

"616. Fees for examination of welders :-

Fees for examination of welders under this chapter shall be Rs.50/- and this shall be borne by the applicant. In addition, the applicant shall bear all other expenses like cost of material and workshop and testing facilities as fixed by the competent authority".

Regulation No.623.

The following regulation shall be substituted, namely :-

"623. Application. These regulations shall apply to Heat Exchangers, Converters, Evaporators and similar vessels in which steam is generated or the vessels which are connected fittings of a steam pipe or feed pipe where the guage pressure exceeds 1 kg./cm^2.".

Appendix C-The following shall be substituted, namely :-

List of Inspecting Authorities recognised as competent under Regulation 2(g) of the Indian Boiler Regulations, 1950.

S.No.	Name of the Inspecting Authority	Area of operation
1.	Llyod's Register of Shipping, 71, Fenchurch Street, London E.C.3, ENGLAND.	All countries except India.

2.	Commercial Union Assurance Co.Ltd., P.O.Box 232, Pembroke House, 40 City Road, LONDON EC1 P 1EE.	Great Britain & Ireland.
3.	Scottish Boiler and General Insurance Co.Ltd., Windsor House, 250-St. Vincent Street, Glasgow G 2 5 QT SCOTLAND.	British Isles
4.	M/s. Kennedy & Donkin, Electrical Mechanical Consultants & Associated Civil Engineering Consultants, MANCHESTER (U.K.).	British Isles
5.	National Vulcan Engineering Insurance Group Ltd., St. Mary's Personage, MANCHESTER M 60 9 AP.	Great Britain & Northern Ireland.
6.	The Vulcan Boiler and General Insurance Ltd., 67, King Street, Manchester-2, ENGLAND.	- do -
7.	British Engine Insurance Ltd., Longridge House, MANCHESTER M 60 DDT.	Great Britain, Northern Eire, Belgium and Netherland.
8.	M/s. Preece, Cardew & Rider, 8 & 10, Queen Anne's Gate, Westminister S.W.1, ENGLAND.	Great Britain.
9.	M/s. Eagle Star Insurance Co.Ltd., 1, Threadneedle Street, London E.C.2, ENGLAND.	Great Britain & Northern Ireland.
10.	Insurance Engineering Ltd., Mode House, Solisburn Street, Southamp-tm, ENGLAND.	British Isles.
11.	M/s. Merz and Mclellan Consulting Engineers, Millburn, Eshers, Surrey, ENGLAND.	All European countries.

12.	M/s. Rendel Palmer and Tritton, Consulting Engineer, 125, Victoria Street, Westminister, London S.W.1, ENGLAND.	All European countries.
13.	The London and Lancashire Insurance Co.Ltd. 7, Chancery Lane, London W.C.2, ENGLAND.	Great Britain, Northern Ireland & Eire.
14.	Chief Inspector of Boilers, Department of Labour, Sydney, New South Wales, AUSTRALIA.	Australia.
15.	Chief Inspector of Boilers, Mines Department, Melbourne, Victoria AUSTRALIA.	- do -
16.	Chief Inspector of Machinery, Mines Department, Perth, WEST AUSTRALIA.	- do -
17.	Chief Inspector for Factories & Boilers Department, Adelaid, SOUTH AUSTRALIA.	- do -
18.	Vereinigung der Technischen Uberwachungs - Vereine, e.V. Germany (Corporation of Tech. Association), Geschaftsstelle: (22a) Essen, Hyssenallee 54/56, Essen, WESTERN GERMANY.	Germany
19.	M/s. United States Consultants Inc. Tokyo, JAPAN.	Japan.
20.	Bureau Veritas, International Register of Shipping, 31, rue Henri Rochefort, Paris, FRANCE.	
21.	The Commercial Union Company of New York, 200, Park Avenue, New York, 17, N.Y., U.S.A.	
22.	India Store Department, (Inspecting Wing), Govt. Building, Bromyard Avenue, Action, London W.3, ENGLAND.	
23.	Chief Inspector of Boilers, Assam.	
24.	Chief Inspector of Boilers, WEST BENGAL.	

25. Chief Inspector of Boilers, BIHAR.

26. Chief Inspector of Boilers, MAHARASHTRA.

27. Chief Inspector of Boilers, MADHYA PRADESH.

28. Chief Inspector of Boilers, DELHI.

29. Chief Inspector of Boilers, TAMILNADU.

30. Chief Inspector of Boilers, PUNJAB.

31. Chief Inspector of Boilers, UTTAR PRADESH.

32. Chief Inspector of Machinery, Brisbane, Queensland, AUSTRALIA.

33. Chief Inspector of Machinery, Hobert, Tasmania, AUSTRALIA.

34. The American Employers Insurance Company, 110 Milk Street, Boston 7, Massachusetts, U.S.A.

35. The Employers Liability Assurance Corporation Ltd., 110, Milk Street, Boston, 10 Massachusetts, U.S.A.

36. The Mutual Boiler and Machinery Insurance Company (Boiler Division) 225, Wyman Street, Waltham 54, Massachusetts, U.S.A.

37. Mechanical Inspection Bureau, Deptt. of Labour and Industry, State of New Jersey, U.S.A.

38. The London Guarantee and Accident Company Ltd., 55 Fifth Avenue, New York 3, N.Y. U.S.A.

39. The Phoenix Indemnity Company, 55 Fifth Avenue, New York, NY, U.S.A.

40. M/s. W.A. Zweibaumer, International Inspection Office, Beachten sie Bitte Unserwe Neue, Anschrift BAD SALZUFLEN, FORSTHAUSWEG 1B, WEST GERMANY. Germany.

41.	M/s. Germanischer Llyod of Germany, Hamburg, 1, GERMANY.	Germany.
42.	International Inspection of Testing Corporation of Japan, Tokyo, JAPAN.	Japan.
43.	M/s. Far East Superintendence Company Ltd.of Japan, Tokyo, JAPAN.	Japan.
44.	M/s. Technischer Uberwachungs - Bereine Wien (Technical) (Inspecting Authority of Vienna, T.U.V. Wein), Vienna, AUSTRIA.	
45.	The Hartford Steam Boiler Inspection and Insurence Co., Hartford, Connecticut, U.S.A.	
46.	M/s. Mellersta Ocha Nowa Seinges Augpannef - Orening, (The Swedish Steam Users Association), Stockholm, SWEDEN.	Sweden.
47.	Control-Co., M.B.H., Zweighiederlessungs, Disburg, WEST GERMANY.	
48.	M/s. INSPEKTA, Corporation for Superintendence of Export and Import Goods, Jindrisska 5, Prague-1, CZECHOSLOVAKIA.	
49.	Chief Inspector of Boilers, ANDHRA PRADESH.	
50.	Chief Inspector of Boilers, ORISSA.	
51.	Chief Inspector of Boilers, KARNATAKA.	
52.	Chief Inspector of Boilers, RAJASTHAN.	
53.	Chief Inspector of Boilers, KERALA.	
54.	The Institute of Technical Inspection at Prague, CZECHOSLOVAKIA.	
55.	The General Accident Fire & Life Assurance Corporation Ltd., London, ENGLAND.	
56.	Technisches Uberwachungsamt, Darmstadt, WEST GERMANY.	
57.	Technisches Uberwachungsamt, Kassel, WEST GERMANY.	

58. Technisches Uberwachungsamt,
Frankfurt am Main,
WEST GERMANY.

59. Directia Generala Pentrua Energie,
Metrologie, Standards si Inventii
(D.G.E.M.S.I.)-
Inspectoratull de stat pentrua
Cazane si Instalatii de ridicat
(I.S.C.I.R.) Bucharest RUMANIA.

60. Associazione Nazionale per il Controllo
della Combustione, Via Urbana 167,
Roma, ITALY.

61. Tedmical Supervision Offices, WARSZAWA, ul.,
Krucza 36, POLAND.

62. Director, Ewbank & Partners Ltd., Engineering
Consultants, 10/11, Grosvenor Place, London
S.W.1 ENGLAND.

63. M/s. Robert W. Hunt Company, Chicago 7,
Illinois, U.S.A.

64. M/s. Det Noske Veritas (The Norwegian Veritas) Norway.
Nedhusgaten 25, Oslo, NORWAY.

65. Association des Industriels de Belgique,
27-29, Avenue Andre Dtonart Auderghem,
Bruxles 16, BELGIUM.

66. ERDE-Hungarian Enterprise for Power Plant
Investment, Budapest V. Szechenyi RKP.3
HUNGARY.

67. Boiler Inspection Branch, Department of Labour, Canada.
Ontario, CANADA.

68. Lumbermens Mutual Casualty Company, U.S.A.
Chicago 40, Illinois, U.S.A.

69. Socialistic Republic of Croatia Republic Yugoslavia.
Secretariat for Industry Steam Boiler
Inspecting Authority, Zagreb in
YUGOSLAVIA.

70. Chief Inspector of Boilers, HARYANA.

71.	Technische Uberwachung der Deutchen Demokratischen Republic (Tuder DDR) BERLIN.	
72.	Centre D' Etudes de Prevention, Paris 17°, FRANCE.	France, W.Germany, Italy, Belgium, Luxumburg & Netherlands.
73.	Japan Machinery and Metals Inspection Institute, Tokyo, JAPAN.	Japan.
74.	Japan Inspection Company Ltd., Tokyo, JAPAN.	Japan.
75.	ENGICO-Engineering Consulting Office Milan, ITALY.	Italy & Germany.
75.	Groupment Des A.P.A.V.E. 60 Rue Da Bootie 75-Paris (3eme), FRANCE.	
76.	Dy. Chief Inspector of Boilers, Pondicherry Administration, PONDICHERRY.	
77.	M/s. Polski Rejestr Statkow Waly Piastowskie 24, 80855 Gdansk, POLAND.	Poland.
78.	M/s. American Bureau of Shipping, 45 - Broad Street, NEW YORK, NY 10004.	U.S.A.
79.	M/s. American Bureau of Shipping, 65, Beared Way, NEW YORK.	
79.	M/s. Societa Generale di Italy Sorveglianze S.P.a, Via Gasperi Gozzi, 1/A, MILAN (ITALY).	Italy.
80.	M/s. A.B. Sveriges, Teknisha Kontrollinstitut, P.O.Box 134, S-19122 Sollentuna Stockholm, SWEDEN.	Sweden.
81.	M/s. Engineers India Ltd., 4-Sansad Marg, NEW DELHI-110001.	Japan, U.K., France West Germany, Italy & Spain.
82.	Chief Inspector of Steam Boiler Safety Training Centre Building, Altinho, Panaji, Goa.	

83. M/s. Plant Safety Ltd., 825a Wilmslow Road, Didsbury, Manchester M 20 8HB, ENGLAND.

84. M/s. Vincotee International Avenue du Roi 157, B-1060 Brussels BELGIUM. — Belgium.

85. M/s. Det Norske Veritas, Veritasvn.1, P.O.Box 300, N-1322, Hoevik, NORWAY. — Belgium & Firland.

Appendix G - The following shall be substituted, namely :-

List of well-known Steel-Makers recognised under Regulation 4(c) of the Indian Boiler Regulations, 1950.

1. British Steel Corporation, 33 Gresvener Place, LONDON S.W.IX 7JS.

2. The Patent Shaft Steel Wroks Ltd., Post Box No.9, Wednesbury Staffordshire, ENGLAND.

3. Fonderies et. Usines de la Providence a Haument (Nord), FRANCE.

4. Sosiete des Acieries de Longway, 103, rue de la Boetie, Paris, FRANCE.

5. Fabrique de Fer de Maubeuge, a Louvrolli (Nord), FRANCE.

6. Forges et Acieries de Dilling, a Dillingen s/SAUME, FRANCE.

7. The Tata Iron and Steel Company Ltd., JAMSHEDPUR.

8. The Indian Iron & Steel Company Ltd., Martin Burn House, 12 Mission Row, CALCUTTA-1.

9. M/s. Visvesvaraya Iron & Steel Ltd., Bhadravati-577301. (Southern Railway), KARNATAKA.

10. Messrs. Mannesmann Rohrenwerke AG, AG 400 Dusseldorf 1, Postfach 1104, WEST GERMANY.

11. Messrs HOESCH HUTTENWERKE Aktiengesellschaft Dortmund, WEST GERMANY.

12. The United States Steel Corporation,
525, William Penn Place, Pittsburgh, Pa
(U.S.A.).

13. Messrs Pittsburgh Steel Company,
Pittsburgh 30, Pa., (U.S.A.).

14. Messrs. Babcock & Wilcox Company Tubular Products
Division, Beaver Falls, P.A. U.S.A.

15. Messrs. Colorado Fuel and Iron Corporation,
575, Madison Avenue, New York, 22, N.Y., U.S.A.

16. Messrs. Republic Steel Corporation, Chrysler Building,
New York, 17, U.S.A.

17. Messrs Bethlehem Steel Co., Bethlehem,
Pennsylvania, U.S.A.

18. Messrs Yawata Iron & Steel Co.Ltd., No.11, Chome,
Marunouchi, Chiyodaku, Tokyo, JAPAN.

19. Messrs. Lukens Steel Co., Coatesville Pa., U.S.A.

20. M/s. AUGUST THYSSEN-HUTTE, AG DUISBURG-HAMBORN,
POSTFACH 67, WEST GERMANY.

21. The Vitkovice Steel Works, Klement Gottwald,
National Corporation, Ostrava 71, CZECHOSLOVAKIA.

22. Messrs. Degerfors Jarnverks Aktiebolag, Degerfors,
SWEDEN.

23. M/s. Union Siderurgique du Nord et de l'Est de la France,
USINOR, Immeuble "Ile de France", 4 Place de la pyramide,
Paris-La Defense 9, FRANCE.

24. Lorraine-Escaut, 7, Rond Point Dugenud, Paris-XVI,
FRANCE.

25. Phoenix Steel Corporation, 121, Bridge Street,
Phoenixville, Pa., U.S.A.

26. Sumitomo Metal Industries Ltd., 31, Kawaramachi 4 chome,
Higashi-Ku Osaka, JAPAN.

27. Messrs Fuji Iron & Steel Co.Ltd., (Fuji Sietetsu K.K.)
12, 1-Chome-Nihon-bashi-Kobashi, Chou-Ku, Tokyo,
JAPAN.

28. Messrs. Nippon Kokan Kabushiki Kaisha, (Japan Steel & Tube Corporation), Otemachi, Chiyoda-Ku, Tokyo, JAPAN.

29. Acciaierie E Ferriere Lombarde Falck S.P.A. Milan (Italy) Corso Mattestti No.6.

30. The Babcock & Wilcox Company, Barberton, Ohio, U.S.A.

31. DALMINE S.P.A., Via Brera 19, Milanmo 10, ITALY.

32. Fabrica Italiana Tubi Via Lanzone, 4-MILANO, ITALY.

33. Hindustan Steel Ltd., Rourkela Steel Project, Rourkela, ORISSA.

34. The Timken Roller Bearing Company, 1835, Dueber Avenue, S.W., Canton 6, Ohio, U.S.A.

35. ITALSIDER, Alti Forni E Acciaierie Riunite Ilva e Cornigliano, S.p.A., Genova, Via Corsica 4, ITALY.

36. Kaiser Steel Corporation, 300 Lakeside Drive, Oakland, California, U.S.A.

37. Vereinigte Osterreichische, Eisen-und Stahlwerke Aktiengesellschaft, Linz/Donau, AUSTRIA.

38. Jones & Laughlin Steel Corporation, 3, Gateway Centre, PITTSBURGH 30, PA, U.S.A.

39. Rheinstahl Huttenwerke AG, Werk Ruhrstahl Henrichshuttoe Hattingen/Ruhr, WEST GERMANY.

40. Fried Krupp Huttenwerke AG, Gusstahlwerk Bochumer Verein, Bochum, WEST GERMANY.

41. Huttenwerke Oberhausen AG, (HOAG)Oberhausen/Rheinland GERMANY.

42. Klockner-Werke A.G., Georgsmarienwerke, Osnabruck, Bessemer Str.I, GERMANY.

43. Stahl-und Rohrenwerke REISHOLZ GmbH, Dusseldorf, Henkelstrasse, 209, GERMANY.

44. Kobe Steel Ltd., No.36, I-Chome, Wakinohama-cho, Fukiai-Kobe, JAPAN.

45. Klockner-Werke, Hutte Bremen, Bremen 18, WEST GERMANY.

46. Durgapur Steel Project, Durgapur, WEST BENGAL.

47. VEB Stahlund Walzesk Riesa 84 Riesa e.d.Elbe
German Democratic Republic.

48. MANNEL FRERES, 42, Rive De Gier, FRANCE.

49. Hindustan Steel Limited Alloy Steel Plant, DURGAPUR.

50. Kawasaki Steel Corporation 1-1, Kitahonmachi-dori
Fukiai-Ku, Kobe, JAPAN.

51. Rohrenwerke Bous Saar GmbH 6626 BOUS, Postfach 150,
WEST GERMANY.

52. Edelstahlwerke Bundrus A.G. Wetzlar, 6330, Wetzlar,
Postfach 204, WEST GERMANY.

53. Schoeller Bleckmann Stahlwerke Aktiengesells,
Haft Wildpretmarkt 2, 1011 Vienna, AUSTRIA.

54. M/s. Sandvik Aktiebolag, Pack, S-81101,
Sandviken 1, SWEDEN.

55. M/s. Round Oak Steel Works Ltd., P.O.Box 3,
Brierley Hills, Staffordshire Dy 51 LF, ENGLAND.

56. M/s. Brown Bayley Steel Ltd., Leeds Road,
Shaffield S 93 TT, Yorks, ENGLAND.

57. M/s. Creusot Loire (Groupe Berine Schneide)
5, rue de Montessuy, 75007 Paris, FRANCE.

58. M/s. Thyssen Edelstahlwerke A.G. 4150, Krefeld 1,
Oberschlesienstrane 16, Postfach 730, WEST GERMANY.

59. Mahindra Ugine Steel Co.Ltd., Bakhtawar, Nariman Point,
BOMBAY-400021.

60. M/s. Vereinigte-Osterreichische Eisenund,
Stahlwerke-Alpine Montan, Aktiengesellschaft
Friedrichstra Be 4, 1011 Wien, AUSTRIA.

61. M/s. Nippon Steel Corporation, 6-3, Otemachi
2-Chome, Chiyoda-Ku, Tokyo, JAPAN.

62. M/s. Thyssen Henrichshutte Aktiengesellschaft,
Postfach 360, 432 Hattingen, Brucher Strasse 45,
WEST GERMANY.

...

63. M/s. Mukund Iron & Steel Works Ltd.,
Lal Bahadur Shastri Marg, Kurla, BOMBAY.

64. M/s. Fried Krupp Huttenwerke AG, D 4630, Bochum,
Allaegstr Be 165, P.O.Box 1370, WEST GERMANY.

65. M/s. Bihar Alloy Steels Limited, P.O. Balkudra-829119,
Patratu, Distt. Hazaribagh, BIHAR.

66. M/s. Bokaro Steel Ltd., Main Administrative Building,
Bokaro Steel City-1, Distt. Dhanbad, BIHAR.

67. M/s. Kalyani Steel Ltd., Mundwa, POONA-411036.

68. M/s. Durgapur Steel Plant, DURGAPUR-713203.

69. M/s. Central Foundry Forge Plant,
Bharat Heavy Electricals Ltd., Ranipur, HARDWAR.

70. M/s. Nuove Dias Societa Italiana, Acciai Speciali
(Ex-Breda Siderugica SPA) V.Le Sarca 336, Milano, ITALY.

71. M/s. Fabrique de Fonte Charterei 6000 Charteroi,
BELGIUM.

72. M/s. Babcock and Wilcox Espanola, SA, Alda de Recalde,27
Apdo 294, 48009 Bilbao, SPAIN.

73. M/s. Forges-de-Clabecq. SA, B 1361, Tubize, BELGIUM.

74. Tubos Reunidos, S.A. Maximo Aguirre, 18 Bis, 7o Planta,
Apartado 108, 48011 Bilbao, SPAIN.

75. M/s. Forjas Y Aceros De Reinosa S.A., Paseo De Alenjandra
Celonje I, Apartado De Correos 3, Reinosa, SPAIN.

76. Societe Vallourec, 7, Place Chancellor Adenauer,
75016 Paris, FRANCE.

77. Benteller Werke A.G. Paderwerke GMBH Benteller, Postfach
D-4790, Paderborn, WEST GERMANY.

78. M/s. Stahlwerke Peine Salzgitter AG, (P+S), P.O.Box 41 1180,
D-3320, Salzgitter 41, WEST GERMANY.

79. M/s. Bhilai Steel Plant, BHILAI-490 001. MADHYA PRADESH.

Appendix I - The following shall be substituted, namely :-

List of Competent Authorities recognised by the Central Boilers Board.

1. Chief Inspector of Boilers, Assam.
2. Chief Inspector of Boilers, West Bengal.
3. Chief Inspector of Boilers, Bihar.
4. Chief Inspector of Steam Boilers, Bombay.
5. Chief Inspector of Boilers, Madhya Pradesh.
6. Chief Inspector of Boilers. Delhi.
7. Chief Inspector of Steam Boilers, Madras.
8. Chief Inspector of Boilers, Punjab (I).
9. Chief Inspector of Boilers Uttar Pradesh.
10. Chief Inspector of Boilers, Andhra Pradesh.
11. Chief Inspector of Boilers, Orissa.
12. Chief Inspector of Boilers, Rajasthan. Karnataka.
13. Chief Inspector of Boilers, Rajasthan.
14. Chief Inspector of Boilers, Kerala.
15. British Engine, Boiler & Insurance Co.Ltd., Longridge House, Manchester-4.
16. National Boiler & General Insurance Co.Ltd., National Buildings, St. Mary's Parsonage, MANCHESTER-3.
17. Ocean Accident & Guarantee Corporation Ltd., Pembroke House, 40, City Road, LONDON E.C.1.
18. Scottish Boiler & General Insurance Co.Ltd., 82, St. Vincent Street, GLASGOW C.2.
19. Vulcan Boiler & General Insurance Co.Ltd., 67, King Street, MANCHESTER-2.
20. National Test House, Alipore, CALCUTTA-27.
21. Department of Mines, Boiler Inspection Branch, 632, Bourke Street, MALBOURNE C.1., AUSTRALIA.
22. Lloyd's Register of Shipping, 71, Fenchurch Street, LONDON. EC.3.
23. United States Consultants Incorporated, Tokyo, JAPAN.
24. International Inspection and Testing Corporation, Tokyo, JAPAN.

25. The London & Lancashire Insurance Company Limited, 7, Chancery Lane, LONDON W.C.3.

26. Australian Welding Institute, Queenland, AUSTRALIA.

27. Chief Inspector of Steam Boilers and Smoke Nuisance, Gujarat.

28. International Inspection & Testing Corporation, No.14,2-Chome Koamicho, Nibonbashi, Chuo-Ku, Tokyo, JAPAN.

29. The Polish Technical Supervision Office (URZAD DO ZDRV TECHNICZNECO) Warszawa, Krucza-36, POLAND.

30. Chief Inspector of Boilers Haryana.

31. National Test House, Bombay Branch, Sewri, BOMBAY-15.

32. Bureau Veritas, 31, the Henri Rechefort, 31 PARIS (17E) FRANCE.

33. Vyskumny Ustav Zvaracsky, (Welding Research Institute), Barataislava, Ulica Februaroveho, Vitazatve 135, CZECHOSLOVAKIA.

34. Insurance Engineers Limited, Model House, Salsibury Street, Southampton, ENGLAND.

35. Vereinigung der Technischen Uberwac-bungs-Vereine e.v., Essen, Huyssenallee 52-56, WEST GERMANY.

36. Far East Superintendence Company Ltd., KOBE, JAPAN.

37. Dy. Chief Inspector of Boilers, Pondicherry Administration, PONDICHERRY.

38. Welding Research Institute, Bharat Heavy Electricals Ltd., TIRUCHIRAPALLI.

39. Chief Inspector of Boilers, GOA.

Appendix J - The following shall be substituted, namely :-

APPENDIX J

Inspection and Testing of Boilers during construction.

GENERAL.

"The Inspecting Authority shall have access to the works of the

manufacturer at all reasonable times and shall inspect the manufacture of the boiler at the following stages and may reject any part that does not comply with the requirements of the Indian Boiler Regulations, 1950. In case of any doubt, the Inspecting Authority may examine at any stage other than the stages stipulated below. The manufacturer shall gave at least 4 days notice to the Inspecting Authority/ Inspecting Officer before reaching each stage. Before undertaking any of the stage inspections the Inspecting Authority/Inspecting Officer shall satisfy himself that the testing equipment/instrument has been properly calibrated.".

I. AT THE STEEL WORKS

When the billets, plates, angles, bars, skelps or any other parts to be used in the construction of the boiler are ready for examination and marking off of the mechanical test specimen and before they are cut from the parent plate or plates, when test specimen have been machined and are ready for testing.

II. AT THE PIPE/TUBE MAKERS AND FABRICATORS WORKS

(a) When the billets or skelps are ready for identification;

(b) When the pipes/tubes are ready for examination and selection of mechanical test pieces;

(c) When the test speciments are ready for testing;

(d) When the pipes/Tubes are already for hydraulic test. For parts manufactured from tubes/pipes at Fabricatr's works either by manupulation or fabrication as may be required by the Inspecting Authority and in all cases of fabrication by welding after the weld preparation has been made, the components have been assembled and tack weldedin position for final welding, and hydraulic test after completion of fabrication.

III. AT THE BOILER MANUFACTURER'S WORKS

(1) Water Tube Boilers

(A) Fusion Welded Drums and Headers

(B) Seamless drums and headers

(C) Riveted Drums

(D) Headers for Water Tube Boilers of Riveted Construction.

(E) Tubes and integral piping.

"4. FUSION WELDED DRUMS AND HEADERS.

(i) When plates have been received at the boiler makers works to compare identification markings with those recorded on the steel makers certificate of manufacture and tests and to check the test results furnished by the steel makers in respect of mechanical and chemcial properties, and when the test plates are ready for marking for identification before they are cut from the parent plate or plates.

(ii) When the cylindrical shell plates are formed to shape with the edges for welding and set up in readiness for commencement of welding and when test plates are attached.

(iii) When the welding of main cylindrical shell is completed and the shell checked for circularity and the radiographic or ultrasoni test records are available for scrutiny.

(iv) When the end-plates are ready for identification with the mill certificate and cut from the end-shape forming operation.

(v) When the end-plates are formed to shape with well edges prepared and set on to the cylindrical shell in readiness for the circumferential welding operation.

(vi) When the welding of the end-plates to the cylindrical shell is complete and the radiographic or ultrasonic test records are available for scrutiny.

(vii) When each plain shell drums or header is prepared to receive compensation plates and attachments, and a representative numb of stand pipes, tubes or tube stubs are set up ready for weldi

(viii) When all welding on each drum is complete, the Inspecting Authority shall check the record of heat treatment and the marking off preparation and testing of specimens from the test plates.

(ix) At hydraulic test, followed by external and internal examinati and stamping. On thick drums of high carbon or alloy material further non-destructive examination shall be done on drums, nozzle and stub weld after stress-relief.

(x) Any drum having tube holes drilled subsequently to the hydraulic test shall be further examined on completion of this work and prior to despatch from the manufacturers work.".

B. Seamless Drums and Headers

(i) When material is ready for identification with the steel makers certificates of manufacture and test, also when each cylinder is prepared for forming, or welding of separate end closures and to identify test plate material.

(ii) When each plain shell drum or header is prepare to receive compensation plates and attachments and a representative number of stadpipes, tubes or tubes stubs, are set up ready for welding.

(iii) When all welding on each drum is complete and the radiographs or ultrasonic test records are available. The inspecting authority shall check the record of heat treatment and the marking off preparation and testing of specimens from the test plates.

(iv) At hydraulic test, followed by external and internal examination and stamping. On thick drums of high carbon or alloy material further non-destructive examination shall be done on drum nozzle and stub welds after stress relief.

(v) Any drum having tube holes drilled subsequently to the hydraulic test shall be further examined on completion of this work and prior to despect from the manufacturers' works.

C. Riveted Drums

(i) When cylindrical shell plates are ready for identification with plate mill certificates at boiler maker's works and cut to size ready for forming to cylindrical shape.

(ii) When the drum shell plates are bent to the circular form and drum ends are flanged.

(iii) When the drum shell and drum ends are drilled and when rivets are ready for testing.

(iv) When the drum seems are in process of riveting.

(v) When the boiler drums are ready for hydraulic test.

D. Headers for water tube Boilers of Riveted construction.

(i) When cylindrical shell plates are ready for identification

with plate mill certificates at boiler maker's works and cut to size ready for forming to cylindrical shape.

(ii) When the test ring is ready for stamping and marking off of the test specimens for identification and before they are cut from header.

(iii) When the test specimens are ready for testing.

(iv) When the header is ready for hydraulic test.

B. Tubes and internal pipings.

(i) When the tubes, are ready for identification with the tube maker's certificate at the boiler maker's works and a representative number of tubes and pipes are prepared at the ends and set-up ready for welding.

(ii) When records of non-destructive tests on a percentage of butt welds is made available and all attachments have been welded to the tubes and pipings.

"(2) SHELL TYPE BOILERS

(a) Welded construction-Class I Boilers.

(i) When cylindrical shell plates are ready for identification with plate mill certificates at boiler Maker's works and cut to size ready for forming to cylindrical shape. The Inspecting Authority shall also identify weld test plate material.

(ii) When drum or shell plate and end-plates have been formed with the plate edges prepared for welding and when test plates are attached.

(iii) When the welding of main cylindrical shell is completed and the shell checked for circularity and the radiographic or ultrasonic test records are available for scrutiny.

(iv) When weld test specimens have been prepared from the test plate previously selected to witness the required test.

(v) When openings have been prepared, and when stand pipes and similar connections have been tack-welded in position and subsequently on completion.

(vi) When all welding of drum or shell plate is complete the Inspecting Authority shall check the record of heat treatment where heat treatment is required under these regulations.

(vii) At hydraulic test, followed by external and internal examinations and stamping.

(b) Welded construction - Class II and III Boilers.

(i) When cylindrical shell plates are ready for identification with plate mill certificates at the boiler maker's works and cut to size ready for forming to cylindrical shape. The Inspecting Authority shall also identify weld test plate material.

(ii) When drum or shell plate and end-plate have been formed with the plate edges prepared for welding and when test plates are attached.

(iii) When the weld of main cylindrical shell is completed and the shell checked for circularity and radiographic or ultrasonic test records are available for scrutiny.

(iv) When weld test specimens have been prepared from the test plate previously selected to witness the required test.

(v) When openings have been prepared, and when stand pipes and similar connections have been tack-welding in position and subsequently on completion.

(vi) At hydraulic test, followed by external and internal examinations and stamping.".

(ii) All testing shall be witnessed by the Inspecting Authority or the Inspecting Officer.

(iii) Tests shall be made to determine the operative characteristic of the safety valves for which a constant is to be determined and also to establish the discharge efficiency of the safety valve.

(iv) Where possible, the tests to determine operating characteristic and discharge efficiency shall be carried out using the same steam, the same presure conditions and at the same location. When the tests are carried out separately, the valves in each case shall be complete and shall include all internals, e.g. below-dewn adjustment rings.

(v) The set pressure at which the operating characteristics are determined shall be the minimum set pressure forwhich the spring used is designed. The tests shall be carried out usin steam and shall determine the set pressure, the lift at the over pressure specified for the type of valve, as defined in regulation 292.

(vi) The Inspecting Authority may dispense with the Operating Characterstic tests described in A(V).

(vii) Discharge efficiency tests shall be carried out using steam and shall be carried out relative to the operative characteristic tests described in A(V).

(viii) When the Inspecting Authority is satisfied that the design of valve will operate satisfactorily it shall if desired, be permissible to hold the valve head mechanically at the proven lift while carrying out the tests to accertain the discharge efficiency.

B. VALVES USED IN THE TEST PROGRAMME.

(i) The safety valves tested shall, as far as is practicable, be repregentative of the pressure and size range of valve manufactured.

(ii) The tests for operative characteristics and the discharge efficiency test shall be carried out on the three sizes or half the number of sizes in the range, whichever is smaller, with a minimum of two sizes.

(iii) When the range is extended due consideration shall be given, in consultation with the Inspecting Authority, to whether further witnessed tests are necessary.

(iv) The test for operating characteristics shall be carried out at three significantly different set pressure for each size of valve.

(v) The discharge efficiency tests shall be carried out relative to one set pressure for each size of valve.

(vi) Each tests shall be carried out a minimum of three times to obtain acceptable average results.

(vii) For the case of valves of either novel or special design of which onesize only is being manufactured, tests at one set pressure are permitted by agreement with the Inspecting Authority. When the range of sizes or pressure is extended due consideration shall be given in consultation with the Inspecting Authority, to whether further witnessed tests are necessary.

C. DETERMINATION OF CONSTANT C.

Let E be the measure capacity, on test of saturated steam (Kg/H).

Pt be the pressure at safety valve inlet at which the capacity was measured (bar gauge);

A be the area appropriate to the type of valve (mm^2), (see regulation 293 (a);

X be the alloauble percentage over pressure for the type of valve under test.

(See regulation 293).

Ct be the constant determined from test :

$$Ct = \frac{Et}{A \left(\frac{Pt}{1 + \frac{X}{100}} + 1 \right)}$$

To accomodate the permitted spread on test results, tolerance on

valve parts and springs, this calculated value of Ct shall be derated to 80% to obtain the value of C to be used in equation 78 of regulation 293 (a). This is to ensure that all production valves will achieve their rated discharge capacity at not more than the over pressure allowed for the type of valve tested.

"The Inspecting Authority may accept a more favourable derating factor of upto 90% of the calculated value of Ct where the performance of the valves under test and the manufacturing and spring tolerance applicable ensure that the allowable over-pressure for the type of valve under test will not be exceeded when a valve is discharging its rated capacity is service".

Forms.

After Form II, the following shall be inserted, namely :-

Form II-A

Inspecting Authorities certificate of inspection during construction in respect of a Boiler made to foreign Code for export.

(Regulation 3 A.)

Designation of Inspecting Authority

We hereby certify that the _____type, boilers; length,_____diameter,_____working pressure, ,built by Messrs.....
.....at_____under shop Number_____
_____was constructed under our supervision and inspected at various stages of construction by the Inspecting Officer and that the design, construction and workmanship were satisfactory and in every respect in accordance with_____
_____ Code/Specification.
The boiler is stamped as under:-

The boiler on completion was tested to _____ in the presence of the Inspecting Officer on _____ _____and it satisfactorily withstood the test. Details of tests and inspections are furnished with this certificate.

We have satisfied ourselves that the design,

construction and dimensions of the boiler are as shown in the Maker's Drawing No._____ approved and signed by us, and that the particulars entered in the Maker's certificate of manufacture are correct to the best of our knowledge and belief. Maker's certificate signed by them and countersigned by us, as required by the _____ Code/Specification, is enclosed.

Signature of Inspecting Authority.

FORM II-B

INSPECTING AUTHORITIES CERTIFICATE OF INSPECTION DURING CONSTRUCTION OF BOILERS FOR WHICH VARIATIONS FROM STANDARD CONDITIONS HAVE BEEN PERMITTED.

(Regulation 4 (c) (i) Note)
DESIGNATION OF INSPECTING AUTHORITY

We hereby certify that the.....type boilers; length .....diameter.....working pressure..... built by Messrs.....at.....under Shop Number.....was constructed under our supervision and inspected at various stages of construction by the Inspecting Officer, and that the design, construction and workmanship were satisfactory and in accordance with the variations from the standard conditions laid down in the Indian Boiler Regulations, 1950, for material, design and construction features have been permitted by the Board or Inspecting Authority under the Indian Boilers Act, 1923.

The Boiler is stamped on the front end plate with our stamp as shown hereunder :-

---

Makers' Name.....Year of Make.....
Works Number.....

Tested to.....on.....
W.P.....Inspecting Officer's or Inspecting Authority's official stamp.

*The boiler on completion was
The drum and header were subjected to a water pressure test of .....in the presence of the Inspecting Officer on.....19.....and satisfactorily withstood the test.

Samples of materials used in the construction of the boiler were tested in the presence of the Inspecting Officer and found to comply with requirements. All welded seams were subjected to physical tests and radiographic examination wherever applicable and found satisfactory.

Note:- Strike off this paragraph where no such tests have been carried out and the certificate in Form IV by a well-known maker is intended to be furnished.

We have satisfied ourselves that the constructions and dimensions of the boiler are as shown in the Maker's Drawing No.....signed by us and that the particulars entered in the Maker's certificate of manufacture in Form III counter-signed by us, are correct to the best of our knowledge and belief. Particulars of variations from the standard conditions laid down in the said regulations as permitted by the Board or Inspecting Authority are enclosed.

Signature of Inspecting Authority

Dated at..... this ..... day of 19 .....

---

*Strike out what is not applicable."

In Form III, against item No.11, for the existing entry, the following entries shall be substituted, namely :-

"Boilers

"Details of safety valves and test results
Manufacturer.....
Identification marks of valves.....
Maker's No.....
Type.....

Lift (mm).....Drawing Nos.....

Valve details :-
Material.....
Valve Seat.....
Flat/Bevel.....
Diameter of valve seating.....

Valve Body :-
Material.....
Opening at neck.....
Opening at outlet.....

Springs :-
Material.....
Process of manufacture.....
Chemical composition.....

Dimensions:
Outside diameter of coil.....
Section of wire.....
Number of coils.....
Free length of coils.....

Test results :-
Place of test.....date.....
Closing down pressure.....

Remarks :-
Does the valve chatter ?.....
Does the valve seat leak ? .....
Blow off pressure.....

Type of valve and extract of test results.
Type of valve.....
Place of test..... date .....
Constant 'C' by test results.....
Capacity of the valve for the intended blow
Off pressure.....

Signature of Maker's representative Inspecting Authority
Witnessing tests.

In Form IIIA, (i) for the words " as indicated" appearing in the first sentence of Note below the entry "Final hydraulic test",

the words "in conformity with the requirements of regulation 4(c) (vi) or the Note thereto, as the case may be, " shall be substituted.

(ii) for the entries "Intended working pressure" and "Recommended maximum temperature," the entries "design pressure" and "design temperature" shall respective be substituted.

After Form XII A, the following new form shall be inserted, namely :-

"FORM XII A (i)

(Certificate of manufacture and test of steampipes for which variation has been permitted).

Regulation 4 (h)

Name of part.....
Maker's name and address.....
Intended working pressure.....
Recommended maximum temperature.....
Material
Process of manufacture.....
Fully killed/rimmed.....
Chemical composition.....
Pipes

Main dimensions.....
Tolerances.....
Mode of manufacture.....
Identification marks.....
Drawings numbers.....
Bend test on pipe.....
Bend test on weld.....
Flattening test.....
Tensile strength.....
Mode of attachment of flanges.....
Flange particulars.....
Size of branches.....
Mode of attachment of branches.....
Heat treatment.....
Final hydraulic test.....

Note.- In addition, the following information in respect of the

materials shall be furnished in a tabular form as indicated. The information may be given from the established test data or if the material is of standard quality an extract from the standards may be furnished instead.

Metal temperature upto °C	250	275	300	325	350	375	400	425	450	475	500	525	550	575	600
E_t															
S_c															
S_r															

Tensile strength at 20°C.

E_t = Yield point at temperature t (0.2% proof stress)

**S_c = Average stress to produce an elongation of 1% (Creep) in 100,000 hours at the various working metal temperatures.

**S_r = Average and lowest stress to produce rupture in 100,000 hours at various working metal temperatures.

Temperatures range in the table may extend upto the limit of applicability of the material.

The values of S_c and S_r need be furnished only in respect of pipes/tubes intended to be used for working metal temperature above 454°C.

Certified that the particulars entered herein are correct.

The particulars of fabricated components are shown in drawing No.....

The part has been designed and constructed to comply with the variations from the standard conditions laid down in the Indian Boiler Regulations, 1950, for materials, design and construction features which have been permitted by the Board or the Inspecting Authority

under the Indian Boilers Act, 1923 and satisfactorily withstood a water test of on the day of 19 in the presence of our responsible representative whose signature is appended hereunder.

Maker's Representative
(Name and Signature)

Maker_____

We have satisfied ourselves that the pipes have been constructed in accordance with the variatieons, from the standard conditions laid down in the Indian Boiler Regulations, 1950, for material, design and construction permitted by the Board. The tests conducted on the sample taken from the finished pipes have been witnessed by us and the particulars entered herein are correct.

Place_____

Date_____

Name and Signature of
Inspecting Authority

Note (1). This form is intended for the use of both pipe manufacturers and pipe fabricators. Only such of the columns or paragraphs that are applicable, or information that can be obtained and furnished from other certificates, need be filled or entered in this form.

Note (2). In the case of fabrications made from steel pipes obtained from elsewhere, particulars in regard to the "material" and "pipe" shall be taken from similar forms of certificates obtained in respect of pipes and noted in the appropriate columns or paragraphs.

In the case of pipes made from steel, made and tested by well known steel Makers in India or other Countries listed in Appendix 'G', particulars regarding the 'material' as certified by them (in any form) shall be noted in the appropriate columns or paragraphs in this certificate.".

In Form III B - Same as for III A.

After Form III B, the following new form shall be inserted, namely :-

FORM III-B (1)

(Certificate of Manufacture and Test)

REGULATION 4(1)

Maker's name.....

Intended working pressure.....

Maximum recommended metal temperature.....

Material.....

Process of manufacture.....

Fully killed/rimmed.....

Chemical composition.....

Tubes.....

Process of manufacture.....

Main dimensions.....

Tolerances.....

Tensile strength.....

Elongation percentage.....

Bend test.....

Flattening test.....

Crushing test.....

Flare test.....

Flange test.....

Bend test on weld.....

Bending test and drifting test (for copper and brass).....

Heat treatment.....

Hydraulic test.....

Note, In addition, the following information in respect of the material shall be furnished in a tabular form as indicated. The information may be given from the established test data or if the material is of standard quality, an extract from the standard may be furnished instead.

Metal temperature upto °C.	250	275	300	325	350	375	400	425	450	475	500	525	550	575	600

E_t	
S_c	
S_r	

Tensile strength at 20°C.....

Where

E_t = Yield point at temperature t (o.2% proof stress).

**S_c = Average stress to produce an elongation of 1% (creep) in 100,000 hours at the various working metal temperatures.

**S_r = Average and lowest stress to produce rupture in 100,000 hours at various working metal temperatures.

Temperature range in the table may extend upto the limit of applicability of the material.

The value of S_c and S_r need to furnished only in respect of pipes/tubes intended to be used for working metal temperature above 454°C.

Certified that the particulars entered herein are correct.

The part has been designed and constructed to comply with the variations from the standard conditions laid down in the Indian Boiler Regulations, 1950, for material, design and construction features which have been permitted by the Board or the Inspecting Authority under the Indian Boiler Act, 1923 and satisfactorily withstood a water test of on the day of 19 , in the presence of our responsible representative whose signature is appended hereunder.

Maker's Representative
(Name and Signature).

Maker_____

We have satisfied ourselves that the tubes have been constructed in accordance with the variations from the standard conditions laid down in the Indian Boiler Regulations, 1950, for material, design and construction permitted by the Board. The tests conducted on the sample taken from the finished tubes have been

witnessed by us and the particulars entered herein are correct.

Place_____

Date_____

Name and Signature of Inspecting Authority

Note (1).-This form is intended for the use of the both tube manufacturers and tube fabricators. Only such of the columns or paragraphs that are applicable, or information that can be obtained and furnished from other certificates, need be filled or entered in this form.

Note (2).-In the case of fabrications made from steel tubes obtained from elsewhere, particulars in regard to the "material" and "Tubes" shall be taken from similar forms of certificates obtained in respect of tubes and noted in the appropriate columns or paragraphs.

In the case of tubes made from steel, made and tested by well-known steel Makers in India or other countries listed in Appendix 'C' particulars regarding the 'material' as certified by them (in any form) shall be noted in the appropriate columns or paragraphs in this "certificate".

In Form III C - (i) The portion with the heading "Maker" and the sentence below it shall be omitted and the following shall be inserted, namely :-

"Makers Representative MAKERS.....

(Name and signature)

We have satisfied ourselves and the valve/fitting has been constructed and tested in accordance with the requirements of the Indian Boiler Regulations, 1950. We further certify that the particulars entered herein are correct.

Place.....

Name and signature of the Inspecting Officer who witnessed the tests.

Date.....19

Name and signature of the Inspecting Authority.

(ii) For the paragraph beginning with the words "The part" and ending with the words "appended hereunder", the following paragraph shall be substituted, namely :-

"The part has been designed and constructed to comply with the Indian Boiler Regulations for a working pressure of_____and satisfactorily withstood a Hydraulic test using water or Kerosene or with any other suitable liquid in accordance with the provisions of clause (a) of regulation 290 in the day of .....19.....in the presence of our responsible representative whose signature is appended hereinumder.".

(iii) Below Form III C, the following shall be inserted, namely: "Strike out which is not applicable".

(iv) The following note shall be added at the end, namely :-

"Note :- In the case of valve chest made and tested by well-known Foundries or Forges recognised by the Central Boilers Board in the manner as laid down in regulations 4A to 4H, listed in Appendix K, particulars regarding the material as certified by them, in any form, shall be noted in the appropriate columns or paragraphs in the certificates and in case of certificates from well-known Foundries or Forges is produced, such certificate may be accepted in lieu of the certificate from inspection authority in so for as it relates to the testing of material specified in the Form".

Form IV - The following form shall be substituted, namely :-

FORM - IV

STEEL MAKER'S CERTIFICATE OF MANUFACTURE AND RESULTS OF TESTS

REGULATION 4 (c) (iv)

We hereby certify that the material described below has been made by .....by the *.....process and rolled by .....and has been satisfactorily tested in the presence of

out test House Manager or his representative in accordance with the stipulated tests and tolerances.

Test certificate No..... Signature or initials of Test House Manager

Dated.....

Order No.	Cast No.	Specification/ and grade	Deoxidation practice	plate No.	No. of pieces

Wt Tonnes.	Size (mm)	Heat Treatment	Chemical Analysis (Ladles)					
			C	Mn	P	S	Si	Other alloying Elements.

Mechanical Properties						
Y.S. kg/mm^2	U.T.S. kg/mm^2	Elongation %	Bend	Temp. Bend	Homo-geniety	Remarks

Despatch Advice No.	Dated	Wagon No.

Consignee.....
.....
.....

* Actual process used out of the following :-

(i) Basic Open-Hearth

(ii) Acid Open-Hearth

(iii) Basic Oxygen

(iv) Electric Furnace.

Form IV A - The following form shall be substituted, namely:-

FORM - IV A

(Regulation 4 (C) (iv)

It is hereby certified that original steel Maker's certificate in Form IV contain following information in respect of the material used in the manufacture of the boiler or parts thereof bearing Makers Number.....

Countersigned
INSPECTING AUTHORITY

Signature of the representative of Boiler Manufacturer

Order No.....

Dated.....

Part of boiler	Cast No.	Steel making process	Plate No.	Specification and grade

Deoxidation practice	Name of the steel maker	Test No.	Certificate No.	Size (mm) TxWxL	Heat Treatment

Chemical Analysis (Ladle)						Mechanical properties		
C	Mn	P	S	Si	Other alloying elements	Y.S Kg/mm^2	U.T.S Kg/mm^2	Elongation %

Bend	Temp. Bend	Homogepiety	Remarks

Form XIII - For the words

" Seal and
Signature of
Inspecting
Authority", the words

" Seal and
Signature of
Competent
Authority". shall be substituted

Afterh form XIV, the folleving forms shall be inserted, namely :-

FORM XV-A
(Regulation 4A (2))

QUESTIONNAIRE TO BE ANSWERED BY FIRMS SEEKING RECOGNITION BY THE CENTRAL BOILERS BOARD TO BECOME AN INSPECTING AUTHORITY UNDER THE INDIAN BOILER REGULATIONS, 1950.

1. The registered name and address of the association.
2. Address to be notified for the purpose of recognition.
3. The year in which the association was established.
4. Is your association recognised by the Government ?
5. Have you any Branch or Associate Office ?
   If so, please give their names and addresses.
6. How long has your Association been functioning as an Inspecting Authority ? If it is a registered Company, please give the date of registration.
7. Please give details of classes of machinery which you have so far been authorised to examine and code under which this is being done.
8. Please state the types, size and the range of working pressure of the boilers which you have so far inspected during construction as an Inspecting Authority, also state the classes of service you render, namely :-
   (a) Please name the various stages of manufacture at which inspections are carried out.

(b) Excluding inspection at the steel Works.
(c) Only hydraulic test after the manufacture of the boiler has been completed.

9. How many Inspecting Officers have you in your employment ? Please give details of the qualifications held by those Officers.

10. Have you any Testing Laboratory of your own to conduct all destructive and non-destructive tests required in connection with the manufacture of boilers ?

11. Are you prepared to conduct the work of Inspection of boilers, economisers and their accessories strictly in conformity with the Indian Boiler Regulations, 1950?

12. Are you prepared to accept full responsibility for the certificate issued by you ?

13. Has your request for recognition as an Inspecting Authority been rejected by any Authority ? If so, please give details.

14. Are you prepared to issue certificates for the products, you inspect, in the formats of the Indian Boiler Regulations ?

15. Are you aware that the recognition is for a period of 3 years only which is renewable after every 3 years on fresh assessment ?

FORM XV-B

(Regulation 4A (2))

QUESTIONNAIRE FOR ELICITING INFORMATION REGARDING THE COMPETENCY OF A FIRM TO BE RECOGNISED AS "COMPETENT AUTHORITY" UNDER REGULATION 4A (2) OF THE INDIAN BOILER REGULATIONS.

1. Registered name and address of the firm.

2. Address to be notified for the purpose of registration.

3. Year in which the Organisation was established.

4. Address of branch or associate office, if any.

5. Principal work of the organisation.

6. Does the organisation have any training section for the welders ? If so, details of the scheme to be stated.

7. Does the organisation regularly conduct tests on welds done by its welders ? If so, the code followed and the details of tests carried out may please be stated.

8. What are the facilities that can be provided or availed of by the organisation for conducting the tests ?

9. Is the organisation prepared to undertake testing of welders employed by other organisation ?

10. Whether the organisation is prepared to conduct tests as per requirements of the IBR ?

11. The amount of fee which the organisation would charge a candidate for conducting a test for the issue of certificate. Estimates under the following heads may be given :
    (a) For the supply of tests pieces, electrodes and/or filler rods.
    (b) For the use of welding machine :
    (c) For machining the test pieces and preparation of specimen :
    (d) For conducting mechanical tests (including specimens preparation).
    (e) For non-destructive testing:

12. Is the organisation prepared to examine and issue certificate to welders in accordance with the requirements of the IBR, 1950 ?

13. Is the organisation prepared to take full responsibility for certificates issued by it.

14. Are you aware that the recognition is for a period of 3 years only which is renewable after every 3 years on fresh assessment.

FORM XV-C

(Regulation 4A (2))

QUESTIONNAIRE TO BE ANSWERED BY STEEL MAKER SEEKING RECOGNITION BY

CENTRAL BOILERS BOARD TO BE NOTIFIED AS "WELL KNOWN STEEL MAKERS" UNDER REGULATION 4A (2) OF THE INDIAN BOILER REGULATIONS, 1950.

1. Registered Name and address of the firm.
2. Address to be notified for the purposes of recognition
3. The year in which the factory was established :
4. Capacity for production of steel :
5. Process of Manufacture of Steel :
6. Variety of Steel Products :
7. Range of Steel Produced in each variety :
8. Various National and International Standards to which the Steel Products are manufactured :
9. Testing facilities available within the Works :
10. Types of tests conducted :
11. If so, by whom conducted :
12. Are the tests conducted by the firm acceptable to the other organisations of the Country ? If so, by whom ?
13. Is the firm prepared to conduct tests in accordance with the IBR ?
14. Have they been recognised as "Well known Steel Maker" in any other country ?
15. Whether they manufacture steel from the Ore itself or from ore and Scrap or from Scrap only :
16. Whether the firm is prepared to furnish certificates under the provision of IBR.
17. Whether the firm is agreeable to show their manufacturing process and in-House testing facilities to a team consisting of three members appointed by the Board.

18. Are you aware that the recognition is for a period of 3 years only which is renewable after every 3 years on fresh assessment ?

FORM XV.D

(Regulation 4A (2))

QUESTIONNAIRE TO BE ANSWERED BY FOUNDRY/FORGE SEEKING RECOGNITION BY CENTRAL BOILERS BOARD TO BE NOTIFIED AS "WELL KNOWN FOUNDRY/FORGE UNDER REGULATION 4A(2) OF THE INDIAN BOILER REGULATIONS, 1950.

1. The Registered name and address of the firm:
2. Address to be notified for the purpose of recognition.
3. The year in which the factory was established.
4. Capacity of the Foundry/Forge:
5. (i) Capacity for production of Forgings/Castings:

   (ii) Maximum weight and size of Forgings/Castings.
6. Detailed description of the type of job done by them.
7. Materials of Castings/Forgings (ferrous-plain or alloy steel, non-ferrous alloys).
8. Range of forgings/casting produced in each variety.
9. Testing facilities available within the works.
10. Details of testing facility, namely chemical and physical tests etc.
11. Types of test conducted.
12. If so, by whom conducted ?
13. Are the tests conducted by the firm itself acceptable to the other organisations of the country ? If so by whom ?
14. Is the firm prepared to conduct tests in accordance with the Indian Boiler Regulations, 1950 ?
15. Have they been recognised as "Well known Foundry/Forge" in any other country.

16. Whether the firm is in a position to produce Forgings/Casting in accordance with any national/ International specifications fulfilling the minimum requirements of IBR, 1950.

17. Whether the firm has any previous experience to produce Forgings/Castings in accordance with the provision of IBR under the inspection of any recognised Inspecting Authority.

18. Whether the firm is prepared to furnish Certificates under the provision of IBR, 1950.

19. Whether the firm is aggreeble to show their process of manufacture, in house testing facilities to a team of members appointed by Central Boilers Board.

20. Are you aware that the recognition is for a period of 3 years only which is renewable after every 3 years on fresh assessment ?

FORM XV - E

(Regulation 4A (2))

QUESTIONNAIRE TO BE ANSWERED BY TUBE/PIPE MAKER SEEKING RECOGNITION BY CENTRAL BOILERS BOARD AS "WELL KNOWN TUBE/PIPE MAKER UNDER IBR, 1950.

1. Registered name and address of the firm.

2. Address to be notified for the purpose of recognition:

3. Registration No. and year of registration:

4. Capacity of production of Tube/Pipe and the tonnage details per year from the beginning.

5. Reasons for seeking recognition under IBR.

6. Steel grades of Tube/Pipes under production:

7. Size range of Tubes/Pipes under production:

8. Process of manufacture of Tube/Pipes:

9. (a) Whether the firm is producing the raw material or purchasing the raw material.

   (b) If the raw material is purchased, give the details of purchase so far.

(i) from well known steel maker under I.B.R.

(ii) from non-recognised firm.

10. If purchase is as per 9(b) (ii) state whether the raw material is tested at Tube maker's/Pipe maker's premises under IBR.

11. If the firm is producing raw material, state whether the firm is recognised as well known steel maker under IBR.

12. Major Manufacturing facilities available with the firm:

13. Testing facilities available with the works:

14. Types of tests conducted on Tubes/Pipes (enclose complete quality control plan from raw material stage to finished stage alongwith the quality control & inspection personnel of the firm).

15. The details of failures and rejection
(1) By NDT
(2) By Destructive Testing.

16. Whether the firm is in position to manufacture Tubes/Pipes and also provide for their necessary testing facilities in accordance with the provision in IBR, 1950.

17. The name of the firms to whom the firm has supplied Tubes/Pipes:

18. Whether the firm is aggreeable to show their manufacturing process and in-House facilities to a team consisting of three members appointed by the Board.

19. Whether the firm is aware of the fact that the recognition is for a period of three years only which is renewable after every three years term on fresh assessment.

FORM XVI-A

(Regulation 4C (2))

Serial No.

(National Emblem to
be printed here)

CENTRAL BOILERS BOARD

CERTIFICATE OF APPROVAL FOR INSPECTING AUTHORITY

This is to certify that the Inspection and Quality Management System of :

M/s.....

.....

.....

has been evaluated by the Central Boilers Board and has been granted recognition under regulation 4C (2) of the Indian Boiler Regulations, 1950, as an INSPECTING AUTHORITY.

This Certificate is valid for three years, i.e. upto _____

Validity is subject to the adherence to the quality Control prescribed under the provisions of the Indian Boiler Regulations.

_____
Date of Issue

Approval
Certificate No._____

_____
Secretary.

FROM XVI-B

(Regulation 4C (2))

Serial No.

(National Emblem to
be printed here)

CENTRAL BOILERS BOARD

CERTIFICATE OF APPROVAL FOR COMPETENT AUTHORITY

This is to certify that the Examination of Welder System of :

M/s.....

.....

.....

has been evaluated by the Central Boilers Board and has been granted recognition under regulation 4C(2) of the Indian Boiler Regulations, 1950, as a COMPETENT AUTHORITY.

This Certificate is valid for three years, i.e. upto_____

Validity is subject to the adherance to the quality control prescribed under the provisions of the Indian Boiler Regulations.

Approval
Certificate No.....

_____
Date of Issue

_____
Secretary.

FORM XVI - C

(Regulation 4C (2))

Serial No.

(National Emblem to
be printed here)

CENTRAL BOILERS BOARD

CERTIFICATE OF APPROVAL FOR WELL KNOWN STEEL MAKER

This is to certify that the Inspection and Quality Management System of :

M/s.....

.....

.....

has been evaluated by the Central Boilers Board and has been granted recognition under regulation 4C (2) of the Indian Boiler Regulations, 1950, as a WELL KNOWN STEEL Maker, for the manufacture of.....

This certificate is valid for three years, i.e. upto _____

Validity is subject to the adherance to the quality control prescribed under the provisions of the Indian Boiler Regulations.

Approval
Certificate No._____

_____
Date of Issue

_____
Secretary.

FORM XVI - D

(Regulation 40 (2))

Serial No.

(National Emblem to
be printed here)

CENTRAL BOILERS BOARD

CERTIFICATE OF APPROVAL FOR WELL KNOWN FOUNDRY

This is to certify that the Inspection and Quality Management System of :

M/s.....

.....

.....

has been evaluated by the Central Boilers Board and has been granted recognition under regulation 40 (2) of the Indian Boiler Regulations, 1950, as a WELL KNOWN FOUNDRY.

This Certificate is valid for three years, i.e. upto_____

Validity is subject to the adherance to the quality control prescribed under the provisions of the Indian Boiler Regulations.

Approval
Certificate._____ Date of Issue

Secretary.

FORM XVI - E

(Regulation 4C (2))

Serial No.

(National Emblem to
be printed here)

CENTRAL BOILERS BOARD

CERTIFICATE OF APPROVAL FOR WELL KNOWN FORGE

This is to certify that the Inspection and Quality Management System of :

M/s.....

.....

.....

has been evaluated by the Central Boilers Board and has been granted recognition under regulation 4C (2) of the Indian Boiler Regulations, 1950 as a WELL KNOWN FORGE.

This Certificate is valid for three years, i.e. upto_____

Validity is subject to the adherance to the quality control prescribed under the provisions of the Indian Boiler Regulations.

Approval
Certificate No._____

Date of Issue

Secretary.

FORM XVI - F

(Regulation 40 (2))

Serial No.

(National Emblem to
be printed here)

CENTRAL BOILERS BOARD

CERTIFICATE OF APPROVAL FOR WELL KNOWN TUBE MAKER

This is to certify that the Inspection and Quality Management System of :

M/s.....

.....

.....

has been evaluated by the Central Boilers Board and has been granted recognition under regulation 40 (2) of the Indian Boiler Regulations, 1950, as a WELL KNOWN TUBE MAKER for the manufacture of Tubes of Sizes from.....

.....to .....

This Certificate is valid for three years, i.e. upto_____

Validity is subject to the adherance to the quality control prescribed under the provision of the Indian Boiler Regulations.

Approval
Certificate No._____

_____
Date of Issue

_____
Secretary,

FORM XVI - G

(Regulation 4C (2))

Serial No.

(National Emblem to be printed here)

CENTRAL BOILERS BOARD

CERTIFICATE OF APPROVAL FOR WELL KNOWN PIPE MAKER

This is to certify that the Inspection and Quality Management System of :

M/s.....

.....

.....

has been evaluated by the Central Boilers Board and has been granted recognition under regulation 4C (2) of the Indian Boiler Regulations, 1950, as a WELL KNOWN PIPE MAKER for the manufacture of pipe of sizes from .....

.....to.....

This Certificate is valid for three years, i.e. upto_____

Validity is subject to the adherance to the quality control prescribed under the provisions of the Indian Boiler Regulations.

Approval
Certificate No._____

_____
Date of Issue

_____
Secretary.