(TO BE PUBLISHED IN THE GAZETTE OF INDIA, PART II SECTION 3(i) AS G.S.R.)

Government of India
Ministry of Industry
Department of Industrial Development
Central Boilers Board.

....

New Delhi, the 9th January, 1989.

NOTIFICATION

G.S.R. 36 WHEREAS certain draft regulations, further to amend the Indian Boiler Regulations, 1950, were published as required by sub-section (1) of section 31 of the Indian Boilers Act, 1923 (5 of 1923) at page 2875-76 of the Gazette of India, Part II-Section 3 Sub-Section (1), dated the 24th September, 1988 under the notification of the Government of India in the Ministry of Industry (Department of Industrial Development) (Central Boilers Board) No.GSR 755 dated the 12th September, 1988 inviting objections and suggestions from all persons likely to be affected thereby till the 10th November, 1988.

AND WHEREAS the said Gazette was made available to the public on the 27th September, 1988.

AND WHEREAS no objections or suggestions have been received;

NOW THEREFORE, in exercise of the powers conferred by section 28 of the Indian Boilers Act, 1923 (5 of 1923), the Central Boilers Board hereby makes the following regulations further to amend the Indian Boiler Regulations, 1950.

1. (1) These regulations may be called the Indian Boiler (Amendment) Regulations, 1989.

(2) They shall come into force on the date of their publication in the Official Gazette.

2. In the Indian Boiler Regulations, 1950 (hereinafter referred to as the said regulations), in regulation 43, for the words, "manganese.....0.35% maximum", the following shall be substituted, namely :-

"Manganese.....0.35% minimum".

3. In regulation 56A of the said regulations, for the opening paragraph of clause (ii), the following shall be substituted, namely :-

Contd...

TO BE PUBLISHED IN THE GAZETTE OF INDIA, PART II SECTION 3(i) AS G.S.R.

Government of India
Ministry of Industry
(Department of Industrial Development)
Central Boilers Board.

New Delhi, the 10th February, 1989.

NOTIFICATION

G.S.R. 135....WHEREAS certain regulations, further to amend the Indian Boiler Regulations, 1950, were published as required by sub-section (1) of section 31 of the Indian Boilers Act, 1923 (5 of 1923) at page 2032 of the Gazette of India, Part II, Section 3 Sub-Section (1), dated the 2nd July, 1988 under the notification of the Government of India in the Ministry of Industry (Department of Industrial Development) (Central Boilers Board) No. GSR 550 dated the 20th June, 1988 inviting objections and suggestions from all persons likely to be affected thereby till the 18th August, 1988;

AND WHEREAS the said Gazette was made available to the public on the 5th July, 1988;

AND WHEREAS no objections or suggestions have been received;

NOW THEREFORE, in exercise of the powers conferred by section 28 of the Indian Boilers Act, 1923 (5 of 1923), the Central Boilers Board hereby makes the following regulations further to amend the Indian Boiler Regulations, 1950.

1. (1) These regulations may be called the Indian Boiler (Second Amendment) Regulations, 1989.

(2) They shall come into force on the date of their publication in the Official Gazette.

2. In the Indian Boiler Regulations, 1950 in Appendix C, in the list of Inspecting Authorities, after serial number 85 and the entry relating thereto the following shall be added, namely :-

"86. Technischer Uberwachungs-Verein Bayern e.V.
Westendstr, 199, P.O.Box 210420
8000 MUNICH 21
Federal Republic of Germany." F.R.G.

(V.K. GOEL) 10/2/89
Secretary, Central Boilers Board.
Tel No. 38 3454.
File No.6(6)/88-Boilers.

Footnote: Only one amendment has so far been issued to the principal regulations in the year 1989.

To
The General Manager,
Govt. of India Press,
Ring Road, Mayapuri, NEW DELHI.

(TO BE PUBLISHED IN THE GAZETTE OF INDIA, PART II SECTION 3(i) AS G.S.R.)

Government of India
Ministry of Industry
(Department of Industrial Development)
Central Boilers Board.

New Delhi, the 8th May, 1989.

NOTIFICATION

G.S.R. 368 .....Whereas, certain regulations, further to amend the Indian Boiler Regulations, 1950, were published as required by sub-section (1) of section 31 of the Indian Boilers Act, 1923 (5 of 1923) at page 263 of the Gazette of India, Part II-Section 3 Sub-Section (1), dated the 28th January, 1989 under the notification of the Government of India in the Ministry of Industry (Department of Industrial Development) (Central Boilers Board) No. GSR 56 dated the 18th January, 1989 inviting objections and suggestions from all persons likely to be affected thereby till the 18th March, 1989;

And whereas, the said Gazette was made available to the public on the 2nd February, 1989;

And whereas, no objections or suggestions have been received;

Now, therefore, in exercise of the powers conferred by section 28 of the Indian Boilers Act, 1923 (5 of 1923), the Central Boilers Board hereby makes the following regulations further to amend the Indian Boiler Regulations, 1950.

1. (1) These regulations may be called the Indian Boiler (Third Amendment) Regulations, 1989.

(2) They shall come into force on the date of their publication in the Official Gazette.

2. For regulation 148 of the Indian Boiler Regulations, 1950 (hereinafter referred to as the said regulations), the following regulation shall be substituted, namely :-

"148. Minimum thickness of Stay Tubes-Minimum thickness of stay tubes shall be such that the stress on the net cross sectional area in the thinnest portion of the tube shall not exceed 527 kg/cm^2 in case of screwed stay tubes and 700 kg/cm^2 in the welded stay tubes. However, the thickness of stay tube at any part shall not be less than the values shown in the Table below. Minus tolerances shall be taken into account when ordering tubes.

Contd...

(TO BE PUBLISHED IN THE GAZETTE OF INDIA, PART II SECTION 3(i) AS G.S.R.).

Government of India
Ministry of Industry
(Department of Industrial Development)
Central Boilers Board.

New Delhi, the 8th May, 1989.

NOTIFICATION

G.S.R.369.....Whereas, certain regulations, further & amend the Indian Boiler Regulations, 1950, were published as required by sub-section (1) of section 31 of the Indian Boilers Act, 1923 (5 of 1923) at page 264 of the Gazette of India, Part II-Section 3 Sub-Section (1), dated the 28th January, 1989 under the notification of the Government of India in the Ministry of Industry (Department of Industrial Development) (Central Boilers Board) No. G.S.R.57 dated the 18th January, 1989, inviting objections and suggestions from all persons likely to be affected thereby till the 18th March, 1989;

And whereas, the said Gazette was made available to the public on the 2nd February, 1989;

And whereas, no objections or suggestions have been received;

Now, therefore, in exercise of the powers conferred by section 28 of the Indian Boilers Act, 1923 (5 of 1923), the Central Boilers Board hereby makes the following regulations further & amend the Indian Boiler Regulations, 1950.

1. (1) These regulations may be called the Indian Boiler (Fourth Amendment) Regulations, 1989.

(2) They shall come into force on the date of their publication in the Official Gazette.

2. In Appendix 'K' of the Indian Boiler Regulations, 1950 (hereinafter referred to as the said regulations), in the list of Well known Forges,

(i) for serial No.28 and the entry relating thereto, the following serial number and entry shall be substituted, namely :-

"28. M/s. Vishnu Forge (Mysore) Ltd.,
K.R.S. Road,
Metagalli Post,
MYSORE-570016.

Contd...

(TO BE PUBLISHED IN THE GAZETTE OF INDIA, PART II SECTION 3(i) AS G.S.R.).

Government of India
Ministry of Industry
(Department of Industrial Development)
Central Boilers Board.

...

New Delhi, the 4th August, 1989.

NOTIFICATION

G.S.R. 635 .....WHEREAS certain draft regulations, further to amend the Indian Boiler Regulations, 1950, were published as required by sub-section (1) of section 31 of the Indian Boilers Act, 1923 (5 of 1923) at page 3818-3819 of the Gazette of India, Part II-Section 3 Sub-Section (1), dated the 31st December, 1988 under the notification of the Government of India in the Ministry of Industry (Department of Industrial Development) (Central Boilers Board) No.GSR 1025 dated the 9th December, 1988 inviting objections and suggestions from all persons likely to be affected thereby till the 16th February, 1989.

AND WHEREAS the said Gazette was made available to the public on the 2nd January, 1989.

AND WHEREAS no objections or suggestions have been received;

NOW THEREFORE, in exercise of the powers conferred by section 28 of the Indian Boilers Act, 1923 (5 of 1923), the Central Boilers Board hereby makes the following regulations further to amend the Indian Boiler Regulations, 1950 namely:-

1. (1) These regulations may be called the Indian Boiler (Fifth Amendment) Regulations, 1989.

(2) They shall come into force on the date of their publication in the Official Gazette.

2. In the Indian Boiler Regulations, 1950 (hereinafter referred to as the said Regulations) for regulation 385, the following regulation shall be substituted, namely :-

"385. Registration fee - The fee required to accompany an application under sub-section (1) of section 7 of the Act, shall be :

	Rs.
For boiler rating not exceeding 10	300
For boiler rating exceeding 10 but not exceeding 30	400
For boiler rating exceeding 30 but not exceeding 50	450
For boiler rating exceeding 50 but not exceeding 70	550
For boiler rating exceeding 70 but not exceeding 90	650

Contd...

(ii) The fees for examination of lay out plans of steam pipes shall be Rs.20/- per 30 metres of piping or part thereof, subject to a minimum of Rs.50/-, inclusive of all fittings, except fittings like de-superheaters steam receivers, feed heaters and separately fired superheaters. For any fittings like de-superheaters, steam receivers and separators, the fee shall be Rs.150.00 for each such fittings.".

5. For regulation 395E of the said regulations, the following shall be substituted, namely :-

"395E-Fees for inspection of feed water heaters and other fittings.- Fees for inspection of feed water heaters and other fittings shall be charged as under:-

i) Fees for inspection of feed water heater shall be equal to the registration fee of the boiler subject to a maximum of Rs.5000/-

ii) Fees for inspection of other fittings like de-superheaters, steam receivers and separately fired superheaters shall be charged equal to half the registration fee of the boiler to which the steam pipe or feed pipe, as the case may be is attached subject to a maximum of Rs.2500/-.".

Note:-In case of fittings, like de-super heaters, feed heaters and separately fired super heaters, which are parts of the steam pipes or feed pipes attached to a battery of the boilers, the fees shall be charged equal to half the registration fee of any one of the boiler of the battery of the boilers.".

6. For regulation 533 of the said regulations, the following regulation shall be substituted, namely :-

"533. Registration fees - An application for registration of Economiser shall be accompanied by appropriate fee as specified below:

	Rs.
For economiser rating not exceeding 50	250
For economiser rating exceeding 50 but not exceeding 100	300
For economiser rating exceeding 100 but not exceeding 150	350
For economiser rating exceeding 150 but not exceeding 200	400
For economiser rating exceeding 200 but not exceeding 250	450
For economiser rating exceeding 250 but not exceeding 300	475
For economiser rating exceeding 300 but not exceeding 350	500
For economiser rating exceeding 350 but not exceeding 400	550
For economiser rating exceeding 400 but not exceeding 450	600
For economiser rating exceeding 450 but not exceeding 500	650
For economiser rating exceeding 500 but not exceeding 600	700
For economiser rating exceeding 600 but not exceeding 700	750
For economiser rating exceeding 700 but not exceeding 800	800
For economiser rating exceeding 800 but not exceeding 900	850
For economiser rating exceeding 900 but not exceeding 1000	900

Above 1000 rating for every 200 or part thereof, an additional fees of Rs.50/- shall be charged.".

7. For regulation 534B of the said regulations, the following regulation shall be substituted, namely :-

"534-B. Submission of plans of feed pipes:-

(TO BE PUBLISHED IN THE GAZETTE OF INDIA, PART II SECTION 3(i) AS G.S.R.)

Government of India
Ministry of Industry
(Department of Industrial Development)
Central Boilers Board.

New Delhi, the 23rd November, 1989.

NOTIFICATION

G.S.R. 895 WHEREAS certain draft regulations, further to amend the Indian Boiler Regulations, 1950 were published as required by sub-section (1) of section 31 of the Indian Boilers Act, 1923 (5 of 1923) at page 2064 of the Gazette of India, Part II-Section 3 Sub-Section (1), dated the 2nd September, 1989 under the notification of the Government of India in the Ministry of Industry (Department of Industrial Development) (Central Boilers Board) No, GSR 648 dated the 14th August, 1989 inviting objections and suggestions from all persons likely to be affected thereby till the 8th November, 1989;

AND WHEREAS the said Gazette was made available to the public on the 25th September, 1989;

AND WHEREAS no objections or suggestions have been received;

NOW THEREFORE, in exercise of the powers conferred by section 28 of the Indian Boilers Act, 1923 (5 of 1923), the Central Boilers Board hereby makes the following regulations further to amend the Indian Boiler Regulations, 1950.

1.(1) These regulations may be called the Indian Boiler (Sixth Amendment) Regulations, 1989.

(2) They shall come into force on the date of their publication i the official Gazette.

2. In the Indian Boiler Regulations, 1950

(i) in Appendix G, in the list of Well-known Steel Makers, after serial number 79, and the entry relating thereto, the following shall be inserted, namely :-

"80. M/s. Ferro Alloys Corporation Limited,
46, A&B, MIDC Industrial Estate,
Hingna Road,
NAGPUR-440 028."

(ii) in Appendix K,
(a) in the list of Well-known Foundries, after serial number 57 and the entry relating thereto the following shall be inserted, namely :-

Contd...

(TO BE PUBLISHED IN THE GAZETTE OF INDIA, PART II SECTION 3(i) AS G.S.R.)

Government of India
Ministry of Industry
(Department of Industrial Development)
Central Boilers Board.

....

New Delhi, the 23rd January, 1990.

NOTIFICATION

G.S.R. 178 .....WHEREAS certain regulations, further to amend the Indian Boiler Regulations, 1950, were published as required by sub-section (1) of section 31 of the Indian Boilers Act, 1923 (5 of 1923) at page 1564 of the Gazette of India, Part II-Section 3 Sub-Section (1), dated the 1st July, 1989 under the notification of the Government of India in the Ministry of Industry (Department of Industrial Development) (Central Boilers Board) No. GSR 460, dated the 15th June, 1989, inviting objections and suggestions from all persons likely to be affected thereby on or before the 20th August, 1989.

AND WHEREAS the said Gazette was made available to the public on the 7th July, 1989.

AND WHEREAS no objections or suggestions have been received within the aforesaid period;

NOW, THEREFORE, in exercise of the powers conferred by section 28 of the Indian Boilers Act, 1923 (5 of 1923), the Central Boilers Board hereby makes the following regulations further to amend the Indian Boiler Regulations, 1950:-

1.(1) These regulations may be called the Indian Boiler (Amendment) Regulations, 1990.

(2) They shall come into force on the date of their publication in the Official Gazette.

2. In the Indian Boiler Regulations, 1950, in Appendix K,-

(i) in the list of "Well known Foundries", after serial number 60 and the entries relating thereto, the following serial number and entries shall be added at the end, namely:-

"61. M/s. Atul Castings Ltd.,
Village Dhadikania,
Nalagarh-174101,
Distt. Solan (H.P).";

Contd...

(TO BE PUBLISHED IN THE GAZETTE OF INDIA, PART II SEC. 3 SUB-SEC. (i)
AS G.S.R.)

Government of India
Ministry of Industry
(Department of Industrial Development)
Central Boilers Board.

...

New Delhi, the 9 March 1990

NOTIFICATION

G.S.R. 179 .....WHEREAS certain draft regulations, further to amend the Indian Boiler Regulations, 1950, were published as required by sub-section (1) of section 31 of the Indian Boilers Act, 1923 (5 of 1923) at page 2917 of the Gazette of India, Part II-Section 3 Sub-Section (1), dated the 25th November, 1989 under the notification of the Government of India in the Ministry of Industry (Department of Industrial Development) (Central Boilers Board) No. GSR 874 dated the 3rd November, 1989 inviting objections and suggestions from all persons likely to be affected thereby till the 14th January, 1990.

AND WHEREAS the said Gazette was made available to the public on the 1st December, 1989.

AND WHEREAS no objections or suggestions have been received;

NOW THEREFORE, in exercise of the powers conferred by section 28 of the Indian Boilers Act, 1923 (5 of 1923), the Central Boilers Board hereby makes he following regulations further to amend the Indian Boiler Regulations, 1950.

1. (1) These regulations may be called the Indian Boiler (Second Amendment) Regulations, 1990.

(2) They shall come into force on the date of their publication in the Official Gazette.

2. In the Indian Boiler Regulations, 1950,-

(i) in paragraph 3 of sub-clause (iv) of clause (c) of regulation 4, the words "and listed in Appendix G" and "listed in Appendix M" shall be omitted.

(ii) in Form III-C, in the note, the words "listed in Apendix K" shall be omitted.

(iii) Appendices C,G,I,K and M shall be deleted.

(V.K. GOEL)
Secretary, Central Boilers Board.
File No.6(12)/89-Boilers.

To
The General Manager,
Govt. of India Press,
Mayapuri, Ring Road,

(TO BE PUBLISHED IN THE GAZETTE OF INDIA, PART II SECTION 3(i) AS G.S.R. No. 488 dt. 9.10.1993.

Government of India
Ministry of Industry
(Department of Industrial Development)
Central Boilers Board.

...

New Delhi, the 21st September, 1993.

NOTIFICATION

G.S.R. 488. WHEREAS certain regulations further to amend the Indian Boiler Regulations, 1950 were published as required by sub-section (1) of section 31 of the Indian Boilers Act, 1923 (5 of 1923) at pages 415-423 of the Gazette of India, Part II, Section 3, Sub-Section (i), dated the 13th March, 1993 under the notification of the Government of India in the Ministry of Industry (Department of Industrial Development)(Central Boilers Board) No.G.S.R. 137 dated the 24th February, 1993 inviting objections and suggestions from all persons likely to be affected thereby till the expiry of 45 days from the date on which copies of the Gazette containing the said notification were made available to the public,

AND WHEREAS the said Gazette was made available to the public on the 18th March, 1993,

AND WHEREAS the objections and suggestions received from the public were considered by the Central Boilers Board;

NOW, THEREFORE, in exercise of the powers conferred by section 28 of the Indian Boilers Act, 1923 (5 of 1923), the Central Boilers Board hereby makes the following regulations further to amend the Indian Boiler Regulations, 1950, namely:-

1.(1) These regulations may be called the Indian Boiler (Amendment) Regulations, 1993.

(2) They shall come into force on the date of their publication in the Official Gazette.

2. In the Indian Boiler Regulations, 1950,-

(a) for Chapter XIV, the following Chapter shall be substituted, namely:-

"CHAPTER XIV

(Regulations made under clauses (a) and (aa) of section 28 of the Act)

Contd...

(2) Design, construction, workmanship and the method of computing the maximum allowable working pressure:

(a) (i) The construction except where otherwise specified shall be the same as those prescribed in the relevant provisions of the preceding Chapters of these regulations.

(ii) In the case of fusion welded boiler neither stress relieving nor radiography of welded joints is required.

(b) (i) In the Small Industrial Boilers unflanged steel tube plate may be inserted into the shell and welded for the entire thickness as shown in Figure XIV/1 below with a fillet weld having a throat not less than 1.1/ times the thickness of the shell or tube sheet whichever is smaller.

(ii) The minimum thickness of unflanged welded tube sheets shall be 10mm.

t_1 = 2 TIMES REQUIRED THICKNESS OF A SEAMLESS SHELL BUT NEVER LESS THAN 1.25 t_s or GREATER THAN t.

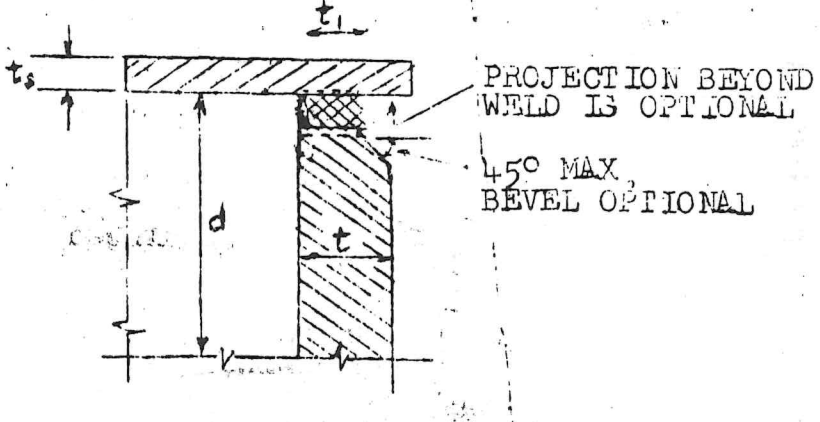

FIG. XIV/1

(iii) The temperature of the heating element of electrically heated steam boilers shall be so controlled that it shall not exceed 650°C.

(c)(i) The tubes shall be made of steel.

(ii) The tube holes shall be drilled full size with shells butt straps and ends bolted up in position or may be punched at least 13mm smaller in diameter than full size and then drilled, reamed or finished full size with a rotating cutter. The sharp-edges and chips removed, the plates and butt straps reassembled metal to metal with pins fittings the holes and with tack bolts.

Contd...

(ii) Boilers not exceeding 300mm. internal diameter may have two 25mm. openings for cleaning one of which may be used for the attachment of the blow off valve. The openings shall be opposite to each other, wherever possible. All threaded openings in the boiler shall be provided with rivetted or welded reinforcement, if necessary, to give four full threads therein.

(iii) Electric boilers of a design employing removable top cover flange for inspection and cleaning need not be fitted with washout openings and Washout plug. Level guages are not required for once through boilers.

(b) Every boiler shall be provided with atleast one feed pump or other feeding device except where it is connected with a water main carrying pressure to feed the boiler or where the steam generator is operated with no extraction of steam (closed system). In the latter case, in lieu of the feeding device, a suitable connection or opening shall be provided to feed the boilers. Such connection shall be not less than 13mm. in diameter.

(c) Subject to the provisions of this sub-regulation every boiler shall be fitted with necessary mountings and fittings as provided in chapter VI of these regulations, and they shall be of substantial construction suitable for 13 kgs/cm^2. All these fittings except safety valves shall be certified by manufacturers of the fittings themselves.

(i) Feed pipe: The feed pipe shall be provided with a check valve and a stop valve of a size not less than that of the pipe. The feed water may be delivered to the boiler through the openings of the same size in the shell as that of the blow off connection.

(ii) Blow Off: Each boiler shall be equipped with a blow off connection, not less than 18mm. in size located to drain the boiler water from the lowest water space practicable when the boiler is under pressure. Feed water shall not be introduced through the openings or connection needed for the water column, the water gauge glass or the gauge cock.

(iii) Water Gauges: Every boiler other than a coil type or a once through boiler shall be fitted with two gauge glasses not less than 150mm. long for determining the water level. The boiler shall have the lowest visible part of the water gauge located at least 25mm. above the lowest permissible water level.

The lowest permissible water level of vertical boilers shall be at a point one-third of the height of the shell above the bottom head or tube sheet. Where the boiler is equipped with internal furnace, the water level shall not be less than one-third of the length of the tubes above the top of the furnace tube sheet.

Contd...

5. DESIGN CODE_____ WORKING PRESSURE (KG/CM^2)_____

6. SIZE OF BOILER

LENGTH (METRES) (WIDTH (METRES) (HEIGHT (METRES) (DIAMETER (METRES)

7. SHELL/FURNACE/TUBE PLATES/FLANGE DETAILS

MATERIAL SPECIFICATION	CHEMICAL COMPOSITION					MECHANICAL PROPERTIES		
	C	Si	Mn	P	S	Y.S.	U.T.S.	% EL.
SHELL								
FURNANCE								
TUBE PLATES								
FLANGE								

BOILER TUBES/PIPE/PADS DETAILS_____

DIAMETER THICKNESS	MATERIAL SPECIFICATION	CHEMICAL COMPOSITION					MECHANICAL PROPERTIES		
		C	Si	Mn	P	S	Y.S.	U.T.S.	% EL.
TUBE									
PIPES									
PADS									

8. VOLUMETRIC CAPACITY_____

9. HEATING SURFACE (Sq.METRES)_____

10. NOZZLE CONNECTION

(a) STEAM OUTLET_____
(NO, SIZE, AND TYPE OF NOZZLES)

(b) SAFETY VALVE_____
(NO, SIZE, AND TYPE OF NOZZLES)

(c) AUXILIARY_____
(AIR VENT) (SIZE, AND TYPE)

(d) BLOWOFF VALVE_____
(NO, SIZE, AND TYPE OF NOZZLES)

(e) FEED VALVE_____
(NO, SIZE, AND TYPE OF CONNECTION)

11. SHOP HYDRO TEST PRESSURE (kg/cm^2)_____ DATE_____

SIGNATURE OF MANUFACTURER

Contd...

(TO BE PUBLISHED IN THE GAZETTE OF INDIA, PART-II, SECTION 3(i) AS G.S.R.)

Government of India
Ministry of Industry
(Department of Industrial Development)
Central Boilers Board.

...

New Delhi, the 8th October, 1993.

NOTIFICATION

G.S.R.....WHEREAS certain regulations further to amend the Indian Boiler Regulations, 1950 were published, as required by sub-section (1) of section 31 of the Indian Boilers Act, 1923 (5 of 1923) at pages 424-428 of the Gazette of India, Part-II, Section 3, Sub-Section (i), dated the 13th March, 1993 under the notification of the Government of India in the Ministry of Industry (Department of Industrial Development)(Central Boilers Board) No.G.S.R. 138 dated the 26th February, 1993 inviting objections and suggestions from all persons likely to be affected thereby till the 1st May, 1993.

AND WHEREAS the said Gazette was made available to the public on the 18th March, 1993;

AND WHEREAS the objections and suggestions received from the public were considered by the Central Boilers Board;

NOW, THEREFORE, in exercise of the powers conferred by section 28 of the Indian Boilers Act, 1923 (5 of 1923), the Central Boilers Board hereby makes the following regulations further to amend the Indian Boiler Regulations, 1950, namely:-

1.(1) These regulations may be called the Indian Boiler (Second Amendment) Regulations, 1993.

(2) They shall come into force on the date of their publication in Official Gazette.

2. In the Indian Boiler Regulations, 1950 (hereinafter referred to as the said regulations), in regulation 2, for clause (g), the following clause shall be substituted, namely:-

"(g) "Inspecting Authority" means an authority recognised by the Central Boilers Board in the manner as laid down in regulations 4A to 4H, as competent to grant a certificate in Form II, IIA or IIB.".

3. In the said regulations, in regulation 4, in sub-regulation (f) in the Note.-

Contd...

If the Inspecting Authority is satisfied that the manufacturer has adequate facilities for testing and inspection of valves intended for service pressure exceeding 10.5 kg/cm^2 or temperature exceeding 204°C and actually tests each fitting at his works, the Inspecting Authority may, at his discretion, undertake test on a sample basis.".

(f) The working pressure and the minimum thickness of the steel valve chest of spherical cross section shall be determined by the following formula, namely:-

$$\text{Working pressure} = \frac{4f}{D - 0.8} \frac{(T-C)}{(T-C)}$$

$$T = \frac{WP \times D}{4f + 0.8WP} + C$$

Where T = the minimum thickness of the chest.

D = the external diameter of the chest.

f = allowable stress for the material to be determined on the basis given in clause (d) above.

C = the minimum positive tolerance as specified hereunder;

For Cast Steel Chest C = 5mm.

For Forged or stainless steel chest C = 2.5 mm.".

8. In the said regulations, in regulation 350, in Table 3, for the words letters and figures,

"$\frac{T.S.}{3.5}$ or $\frac{Et}{1.6}$" and "$\frac{Et}{1.6}$ or $\frac{Sr}{1.6}$ or Sc",

the following words, letters and figures, shall be substituted, namely:-

"$\frac{T.S.}{2.7}$ or $\frac{Et}{1.5}$" and "$\frac{Et}{1.5}$ or $\frac{Sr}{1.5}$ or Sc".

9. In the said regulations, in regulation 351, in Table 4, for the words, letters and figures,

"$\frac{T.S}{3.5}$ or $\frac{Et}{1.6}$" and "$\frac{Et}{1.6}$ or $\frac{Sr}{1.6}$ or Sc"

the following words, letters and figures, shall be substituted, namely:-

"$\frac{T.S}{2.7}$ or $\frac{Et}{1.5}$" and "$\frac{Et}{1.5}$ or $\frac{Sr}{1.5}$ or Sc".

(ii) Where the inspection, so for as the material testing is concerned, has been carried out by a Well-known Foundry" or "Well-known Forge" full inspection fees shall be charged by the Chief Inspector of the State where the valves have been assembled and finally tested.

(iii) Where the components of the valves are inspected and tested in the same manufacturing work where the valves are assembled and finally tested, full inspection fee shall be charged by the Chief Inspector of the State where the manufacturing works is located.

(iv) In case, in a State, components are manufactured by one firm and finally fittings and assembly of the valves are made by another, both the firms shall pay inspection fee on 50:50 basis".

395E -Fees for inspection of feed water heaters and other fittings. - Fees for inspection of feed water heaters and other fittings shall be charged as under:-

(i) Fees for inspection of feed water heater shall be equal to the registration fee of the boiler subject to a mixiumum of Rs.5000/-

(ii) Fees for inspection of other fittings like de-superheaters, steam receivers and separately fired superheaters shall be charged equal to half the registration fee of the boiler to which the steam pipe or feed pipe, as the case may be is attached subject to a maximum of Rs.2500/-.".

Note: In case of fittings, like de-super heaters, feed heaters and separately fired super heaters, which are parts of the steam pipes or feed pipes attached to a battery of the boilers, the fees shall be charged equal to half the registration fee of any one of the boiler of the battery of the boilers".

395F- Marking.-

(a) Carbon steel tubes or pipes which are both over 50mm. outside diameter or over 1000mm.in length shall be marked legibly to show-

(i) The identification symbol for the type of the steel;
(ii) The brand of the manufacture; and
(iii) Whether seamless or electric registance tubes or pipes.

(b) In the case of Carbon steel tubes or pipes less than 50mm.outside diameter or less than 1000mm.in length the information specified in clause (a) of this regulation shall be marked on a tag scrurely attached to the bundle or box.

Contd...

TO BE PUBLISHED IN THE GAZETTE OF INDIA, PART II, SECTION 3 SUB-SECTION (i) AS G.S.R.)

Government of India
Ministry of Industry
(Department of Industrial Development)
Central Boilers Board

New Delhi, the 8th December, 1993.

NOTIFICATION

G.S.R. WHEREAS certain regulations further to amend the Indian Boiler Regulations, 1950 were published, as required by sub-section (1) of section 31 of the Indian Boilers Act, 1923 (5 of 1923) at pages 1400-1401 of the Gazette of India, Part II-Section 3, Sub-Section (i), dated the 18th September, 1993 under the notification of the Government of India in the Ministry of Industry (Department of Industrial Development) (Central Boilers Board) No. GSR 462 dated the 2nd September, 1993 inviting objections and suggestions from all persons likely to be affected thereby till the 10th November, 1993;

AND WHEREAS the said Gazette was made available to the public on the 27th September, 1993;

AND WHEREAS no objections or suggestions have been received;

NOW THEREFORE, in exercise of the powers conferred by section 28 of the Indian Boilers Act, 1923 (5 of 1923), the Central Boilers Board hereby makes the following regulations further to amend the Indian Boiler Regulations, 1950; namely:-

1. (1) These regulations may be called the Indian Boiler (Third Amendment) Regulations, 1993.

(2) They shall come into force on the date of their publication in the Official Gazette.

2. In the Indian Boiler Regulations, 1950 (hereinafter referred as the said Regulations, in regulation 267, in sub-regulation (ab), for paragraph (v), the following paragraphs shall be substituted, namely:-

"(v) the thickness of the pressure parts at the point of attachment where a non-pressure part is welded to a pressure part, in case of butt welds;

(vi) the thickness of the fillet weld at the point of attachment where a non-pressure part is welded to a pressure part, in case of fillet welds."

Contd...

(TO BE PUBLISHED IN THE GAZETTE OF INDIA, PART II, SECTION 3(i) AS G.S.R.)

Government of India
Ministry of Industry
(Department of Industrial Development)
Central Boilers Board.

....

New Delhi, the 7th February, 1994.

NOTIFICATION

G.S.R.....WHEREAS certain draft regulations further to amend the Indian Boiler Regulations, 1950 were published as required by sub-section (1) of section 31 of the Indian Boilers Act, 1923 (5 of 1923) at pages 1338 to 1346 of the Gazette of India, Part II-Section 3, Sub-Section (1), dated the 4th September, 1993 under the notification of the Government of India in the Ministry of Industry (Department of Industrial Development) (Central Boilers Board) No. GSR 439 dated the 20th August, 1993 inviting objections and suggestions from all persons likely to be affected thereby till the 24th October, 1993;

AND WHEREAS the said Gazette was made available to the public on the 10th September, 1993;

AND WHEREAS the objections and suggestions received from the public were considered by the Board;

NOW, THEREFORE, in exercise of the powers conferred by section 28 of the Indian Boilers Act, 1923 (5 of 1923), the Central Boilers Board hereby makes the following regulations further to amend the Indian Boiler Regulations, 1950, namely:-

1.(1) These regulations may be called the Indian Boiler (Amendment) Regulations, 1994.

(2) They shall come into force on the date of their publication in the Official Gazette.

2. In the Indian Boiler Regulations, 1950 (hereinafter referred as the said regulations), in regulation 3, for sub-regulation 4, the following sub-regulation shall be substituted, namely:-

"(4) Where no specific provision is made in these regulations for design or manufacture of any pressure part, the Inspecting Authority may permit the design, manufacture, stage inspections and certification of such pressure parts including the valves, mountings and fittings conforming to the codes or standards like B.S., ASME Boiler and pressure vessels code, TEMA, TRD, GOST and JIS which are known to be commonly used in industrially advanced countries. The decision of Inspecting Authorities shall be binding on all Registering authorities.".

Contd...

6. In the said regulations, for regulation 148, the following regulation shall be substituted, namely:-

"148. Stay tubes:,

(a) Stay tubes are tubes having a weld depth equal to the nominal tube thickness plus 3 millimetres. These stay tubes are not required within tube nests except when the tube nests comprise tubes which are expanded only.

(b) If tube nests comprise plain tubes that are expanded and beaded, expanded and belled or expanded and welded, welded stay tubes shall be used in boundry rows in sufficient numbers to carry the flat plate loadings outside the tube area.

(c) For plain tubes or stay tubes exposed to flame or gas temperatures exceeding 600°C, the ends of welded tubes shall be dressed flush with the welds. If not so exposed, the ends of welded tubes shall extend a maximum of 10 millimetres beyond the weld or, in the case of expanded tubes the tubes shall project beyond the tube plate upto a maximum of 15 millimetres.

(d) Each stay tube shall be designed to carry its due proportion of the load on the plates which it supports.

(e) The thickness of stay tubes welded into tube plates shall be such that the axial stress on the thinnest part of the tube does not exceed 70 N/mm^2.

(f) The thickness of stay tube at any part shall not be less than the values shown in the Table below. Minus tolerances shall be taken into account when ordering tubes.

TABLE

Nominal outside diameter in millimetres (1)					Minimum thickness in millimetres (2)
		Not exceeding	38		2.28
Exceeding	38	but not exceeding	51		2.81
Exceeding	51	but not exceeding	70		3.12
Exceeding	70	but not exceeding	76.2		3.38
Exceeding	76.2	but not exceeding	88.9		3.96
Exceeding	88.9	but not exceeding	101.6		4.26
Exceeding	101.6	but not exceeding	127		4.55.".

Contd...

"(b) The thickness of tubes under external pressure shall be calculated as under:-

$$t = \frac{WP' \cdot D}{1.6f} + C \qquad \text{XII/14}$$

Where, t = minimum thickness of tube in mm.

WP' = External working pressure in kg/cm^2 (g)

D = Outside tube diameter in millimetres

C = Corrosion allowance to be taken as 0.75 millimetre but for stainless steel C=0.
Higher value may be adopted if desired by user;

F = allowable stress as per regulation 338.

(c) In no case the thickness of straight tubes under external pressure shall not be less than as specified below:-

Tube outside diameter (mm)	Minimum thickness (mm)
Not exceeding 32	2.10
Exceeding 32 but not exceeding 39	2.28
Exceeding 39 but not exceeding 51	2.81
Exceeding 51 but not exceeding 70	3.12
Exceeding 70 but not exceeding 77	3.38
Exceeding 77 but not exceeding 89	3.96
Exceeding 89 but not exceeding 102	4.26

(d) Internal Pressure:

The thickness of tubes under internal pressure shall be calculated as under:

$$t = \frac{WP \cdot D}{WP + 2f} + C \qquad \text{XII/15}$$

Where WP = Internal working pressure, kg/cm^2 (g), and other symbols as per clarifications indicated at (a) above.

In no case the thickness of straight tubes under internal pressure shall not be less than listed below:

Contd...

(TO BE PUBLISHED IN THE GAZETTE OF INDIA, PART II SECTION 3(i) AS G.S.R.)

Government of India
Ministry of Industry
(Department of Industrial Development)
Central Boilers Board.

New Delhi, the 19th May, 1994.

NOTIFICATION

G.S.R. WHEREAS certain regulations, further to amend the Indian Boiler Regulations, 1950, were published as required by sub-section (1) of section 31 of the Indian Boilers Act, 1923 (5 of 1923) at page 193 of the Gazette of India, Part II-Section 3, Sub-Section (i), dated the 29th January, 1994 under the notification of the Government of India in the Ministry of Industry (Department of Industrial Development)(Central Boilers Board) No.GSR 57 dated the 11th January, 1994 inviting objections and suggestions from all persons likely to be affected thereby till the expiry of 45 days from the date on which copies of the Gazette containing the said notification were made available to the public;

AND WHEREAS the said Gazette was made available to the public on the 16th February, 1994;

AND WHEREAS no objections or suggestions have been received;

NOW, THEREFORE, in exercise of the powers conferred by section 28 of the Indian Boilers Act, 1923 (5 of 1923), the Central Boilers Board hereby makes the following regulations further to amend the Indian Boiler Regulations, 1950, namely:-

1. (1) These regulations may be called the Indian Boiler (Second Amendment) Regulations, 1994.

(2) They shall come into force on the date of their publication in the Official Gazette.

2. In the Indian Boiler Regulations, 1950, for regulation 623, the following regulation shall be substituted, namely:-

"623. Application.-This Chapter shall apply to Heat Exchangers, Converters, Evaporators and similar vessels in which steam is generated and to the vessels which are connected fittings of a steam pipe and the guage pressure of which is exceeding 1 kg/cm^2:

Contd.

(TO BE PUBLISHED IN THE GAZETTE OF INDIA, PART II SECTION 3(i) AS G.S.R.)

Government of India
Ministry of Industry
(Department of Industrial Development)
Central Boilers Board.

New Delhi, the 28th July, 1994.

NOTIFICATION

G.S.R. WHEREAS draft of certain regulations further to amend the Indian Boiler Regulations, 1950, were published as required by sub-section (1) of section 31 of the Indian Boilers Act, 1923 (5 of 1923) at page 285 to 287 of the Gazette of India, Part II-Section 3 Sub-section (i), dated the 19th February, 1994, under the notification of the Government of India in the Ministry of Industry (Department of Industrial Development) (Central Boilers Board) No.GSR 90 dated the 2nd February, 1994 inviting objections and suggestions, from all persons likely to be affected thereby till the expiry of 45 days from date on which copies of the Gazette containing the said notification were made available to the public;

AND WHEREAS the said Gazette was made available to the public on the 29th March, 1994;

AND WHEREAS no objections or suggestions have been received;

NOW, THEREFORE, in exercise of the powers conferred by section 28 of the Indian Boilers Act, 1923 (5 of 1923), the Central Boilers Board hereby makes the following regulations further to amend the Indian Boiler Regulations, 1950:-

1. (1) These regulations may be called the Indian Boiler (Third Amendment) Regulations, 1994.

(2) They shall come into force on the date of their publication in the Official Gazette.

2. In the Indian Boiler Regulations, 1950 (hereinafter referred to as the said regulations), in the heading above regulation 4A, after the words "Inspecting Authority", the words "Well-known Material Testing Laboratory" shall be inserted.

3. In regulation 4A of the said regulations,-

(i) in sub-regulation (1), after the words "Inspecting Authority", the words "Well-known Material Testing Laboratory" shall be inserted;

(ii) in sub-regulation (2), for the words, figures and letters "Form XV.A to XVE", the words, figures and letters "Form XV.A to XVF" shall be substituted.

Contd..

8. In the said regulations, after form XVI-G, the following form shall be inserted, namely:-

"FORM XVI-H

(See regulation 4C (2))

Serial No.

National
Emblem

CENTRAL BOILERS BOARD

CERTIFICATE OF APPROVAL AS WELL-KNOWN MATERIAL TESTING LABORATORY

This is to certify that after evaluation of the inspection and material testing system of the following laboratory, the Central Boilers Board has granted recognition to it under sub-regulation (2) of regulation 4C of the Indian Boiler Regulations, 1950, as a Well-known Material Testing Laboratory.

M/s._____

_____

_____

_____

This certificate is valid for three years, i.e. upto_____

_____

Contd..

No.6(15)/93-Boilers New Delhi, the 1st August, 1994.

Copy forwarded for information to:-

1. All State Govts. (Deptt. dealing with the subject)-
2. All the members of the Central Boilers Board - as per list.
3. All the Chief Inspector of Boilers of all the State and Union Territories - as per list.
4. All Inspecting Authorities - as per list.
5. The Secretary to the Govt. of Jammu and Kashmir, Works and Powers Deptt., Srinagar.
6. The Chief Engineer (Mechanical a nd Stores Deptt.) and Chief Inspector of Boilers, Govt. of Jammu and Kashmir, Jammu.
7. The Director General, Indian Standards Institution, Manak Bhavan, Bahadur Shah Zafar Marg, New Delhi. (with 4 spare copies).
8. Ministry of Law and Justice and C.A. (Hindi Translation Section) Bhagwan Dass Road, New Delhi (with 4 spare copies).
9. Ministry of Law and Justice and C.A. (Legislative Deptt.) Legislation III Section, Shastri Bhavan, New Delhi. (with 4 spare copies).
10. Rajya Sabha Secretariat, Parliament House, New Delhi. (with 4 spare copies).
11. Lok Sabha Secretariat, Committee Branch II, Parliament House, New Delhi. (with 4 spare copies).
12. The Librarian, Ministry of Industry, Udyog Bhavan, New Delhi (with 4 spare copies).
13. Guard File.

The above notification is being published in the Gazette of India, Part II Section 3(i) as G.S.R., a copy of which will be available on sale with the Manager of Publications, Government of India, Publication Branch, Civil Lines, Delhi-8.

(M.L. AHUJA)
Assistant Director (Technical)
Phone : 3010221/2242.

(TO BE PUBLISHED IN THE GAZETTE OF INDIA, PART II SECTION 3(i) AS G.S.R.)

Government of India
Ministry of Industry
(Department of Industrial Development)
Central Boilers Board.

New Delhi, the 29th July, 1994.

NOTIFICATION

G.S.R.....WHEREAS draft of certain regulations, further to amend the Indian Boiler Regulations, 1950, were published as required by sub-section (1) of section 31 of the Indian Boilers Act, 1923 (5 of 1923) at pages 260 to 263 of the Gazette of India, Part II-Section 3 Sub section (i), dated the 12th February, 1994 under the notification of the Government of India in the Ministry of Industry (Department of Industrial Development) (Central Boilers Board) No.GSR 83, dated the 18th January, 1994 inviting objections and suggestions from all persons likely to be affected thereby till the 24th April, 1994;

AND WHEREAS the said Gazette was made available to the public on the 11th March, 1994;

AND WHEREAS objections or suggestions were considered by the Central Boilers Board;

NOW THEREFORE, in exercise of the powers conferred by section 28 of the Indian Boilers Act, 1923 (5 of 1923), the Central Boilers Board hereby makes the following regulations further to amend the Indian Boiler Regulations, 1950, namely:-

1. These regulations may be called the Indian Boiler (~~Second~~ Fourth Amendment) Regulations, 1994.

2. In the Indian Boiler Regulations, 1950, in regulation 280,-

(i) in sub-regulation (a), for the word, figures and letter "and 27B", the figures, letters and word "27B, 27C and 27D" shall be substituted;

(ii) after figure number 27B, the following figures shall be inserted, namely:-

(Figures 27C and 27D to be printed here)

Contd./-

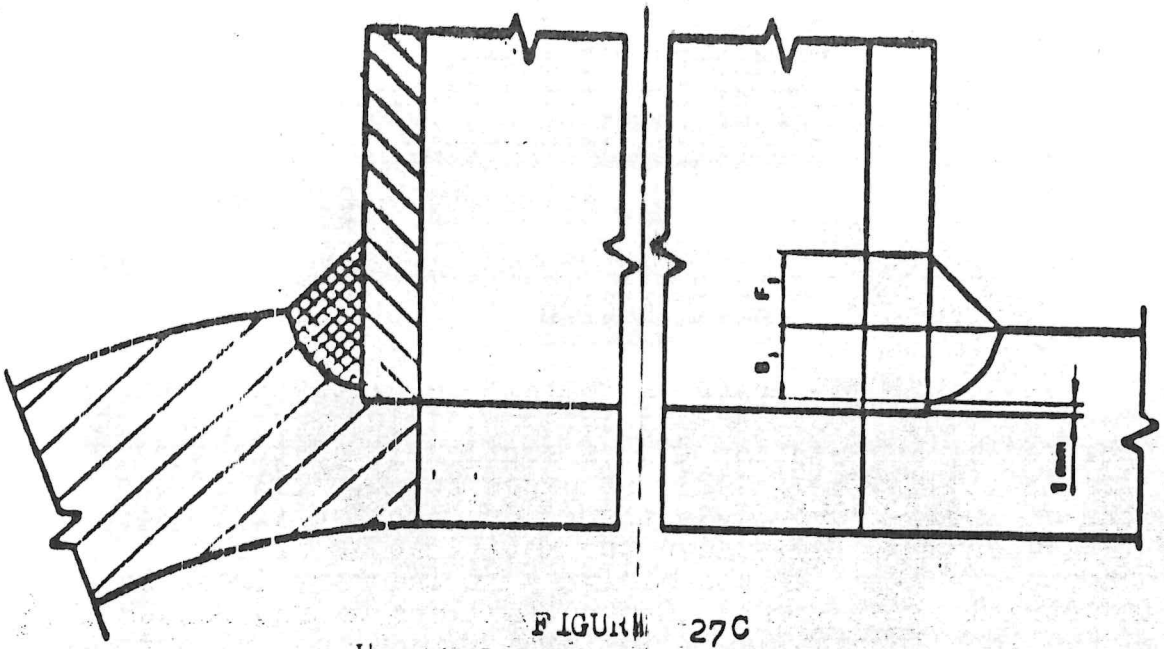

FIGURE 27C
Unreinforced branches inaccessible for welding inside shell.

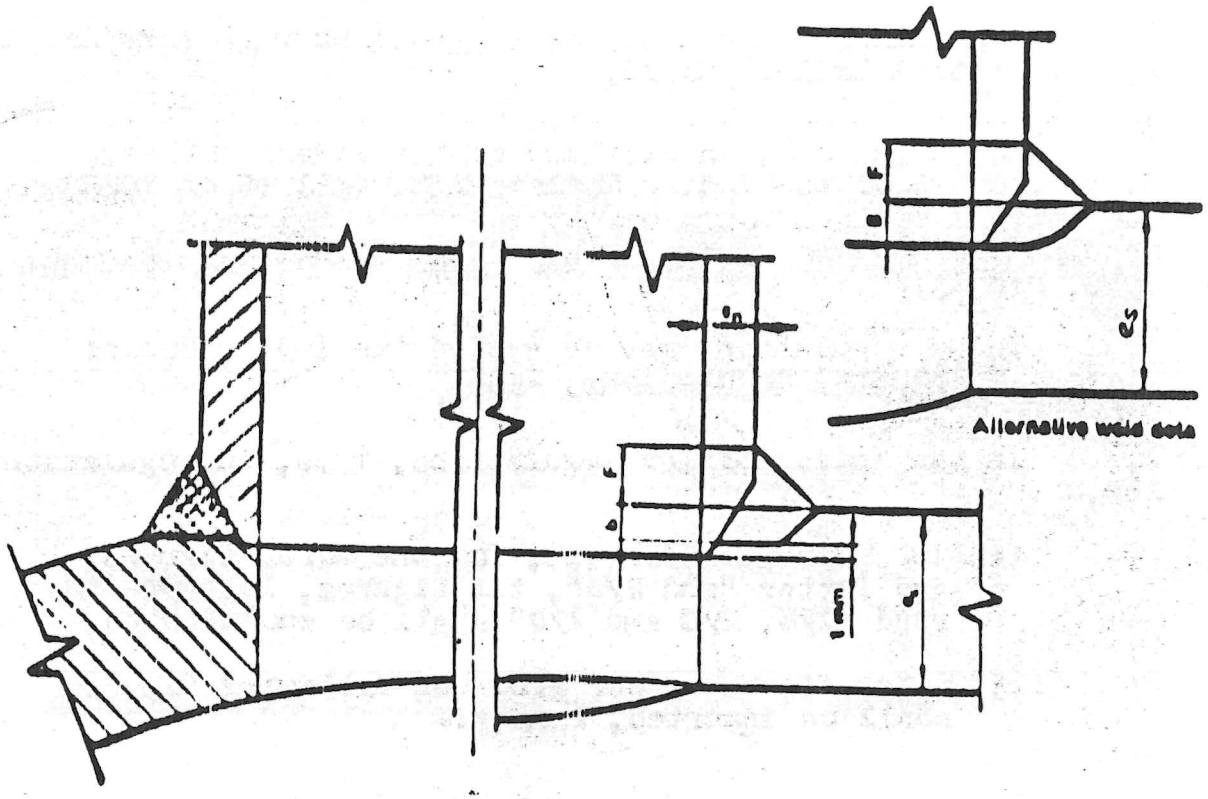

FIGURE 27D
Unreinforced branches inaccessible for welding inside shell.

Notes - The branch must be a loose fit in the hole but the gap at any point, should not exceed 3mm or en/2 whichever is less.

Weld sizes B1 + F1 = 1.5en

F1 should not exceed 16mm not be less than en/2.

Weld size B + F = 1.5en minimum or
1.5es minimum, whichever is less.

F should not exceed 16mm nor be less than en/2.

en = thickness of nozzle

es =thickness of shell.".

(File No. 6(8)/92-Boilers)

29/7

(V.K. GOEL)
Secretary, Central Boilers Board.

Footnote:-The principal regulations were published in the Gazette of India as S.R.O. No. 600 dated 15th September, 1950 and last amended vide Gazette notifications -

(i) GSR 178 dated 24th March, 1990
(ii) GSR 179 dated 24th March, 1990
(iii) GSR 488 dated 9th October, 1993
(iv) GSR 516 dated 23rd October, 1993
(v) GSR 634 dated 25th December, 1993
(vi) GSR 107 dated 26th February, 1994.
(Corrigendum GSR 223 dated 14th May, 1994)
(vii) GSR 250 dated 4th June, 1994.

To

The General Manager,
Government of India Press,
Mayapuri,
Ring Road,
New Delhi-110064.

(TO BE PUBLISHED IN THE GAZETTE OF INDIA, PART II, SECTION 3(i) AS G.S.R.)

Government of India
Ministry of Industry
(Department of Industrial Development)
Central Boilers Board.

New Delhi, the 31st October, 1994.

NOTIFICATION

G.S.R. WHEREAS a draft of certain regulations further to amend the Indian Boiler Regulations, 1950 were published as required by sub-section (1) of section 31 of the Indian Boilers Act, 1923 (5 of 1923), at pages 591 to 595 of the Gazette of India, Part II, Section 3, Sub-Section (1), dated the 16th April, 1994 under the notification of the Government of India in the Ministry of Industry (Department of Industrial Development) (Central Boilers Board) number GSR180 dated the 25th March, 1994 inviting objections and suggestions from all persons likely to be affected thereby before the expiry of forty-five days from the date on which copies of the Official Gazette containing the said notification were made available to the public;

AND WHEREAS the said Gazette was made available to the public on the 11th may, 1994;

AND WHEREAS no objections or suggestions have been received from the public in respect of the said draft by the Central Boilers Board;

NOW, THEREFORE, in exercise of the powers conferred by section 28 of the Indian Boilers Act, 1923 (5 of 1923), the Central Boilers Board hereby makes the following regulations further to amend the Indian Boiler Regulations, 1950, namely:-

1. (1) These regulations may be called the Indian Boiler (5th Amendment) Regulations, 1994.

(2) They shall come into force on the date of there publication in the Official Gazette.

2. In the Indian Boiler Regulations, 1950 (hereinafter referred as the said Regulations,-

(i) regulation 331 shall be renumbered as sub-regulation (1) thereof;

(ii) after sub-regulation (1), as so re-numbered and the 'Note' thereunder, the following sub-regulation shall be inserted, namely:-

"(2) On boilers having wet back reversing chamber, a minimum of two fusible plugs shall be fitted; one on the crown of the reversing chamber and the other on one of the tube plates. On boilers not having Wet back reversing chamber, at least one fusible plug shall be provided on the front end tube plate. The plug shall be fitted in such a way that in the event of fusion of the plug, the pressure inside the boiler shall push the pellets out.".

Contd.....

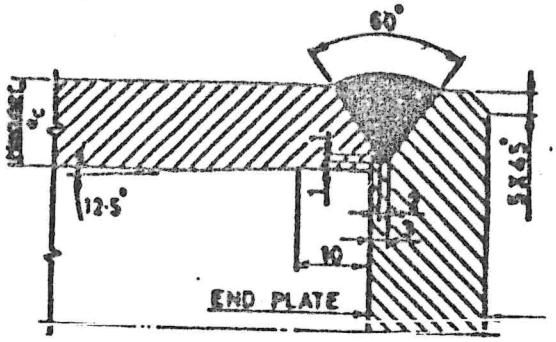

NOTE :- WELD DETAILS ADDED
WITH REFERENCE TO FIG NO. 23-D.

FIGURE 365/2A

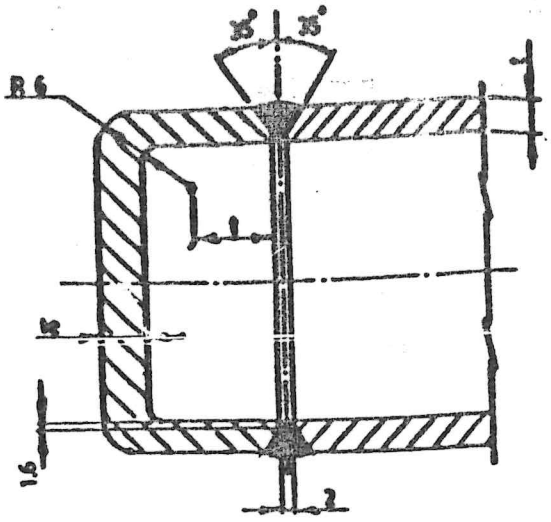

t = STUB THICK
te = END PLATE THICK

FIGURE 365/4

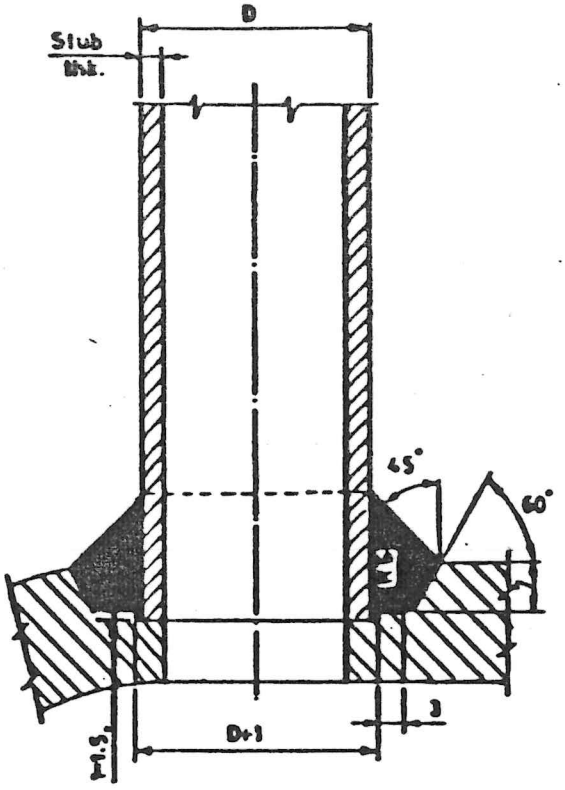

FIGURE 365/17

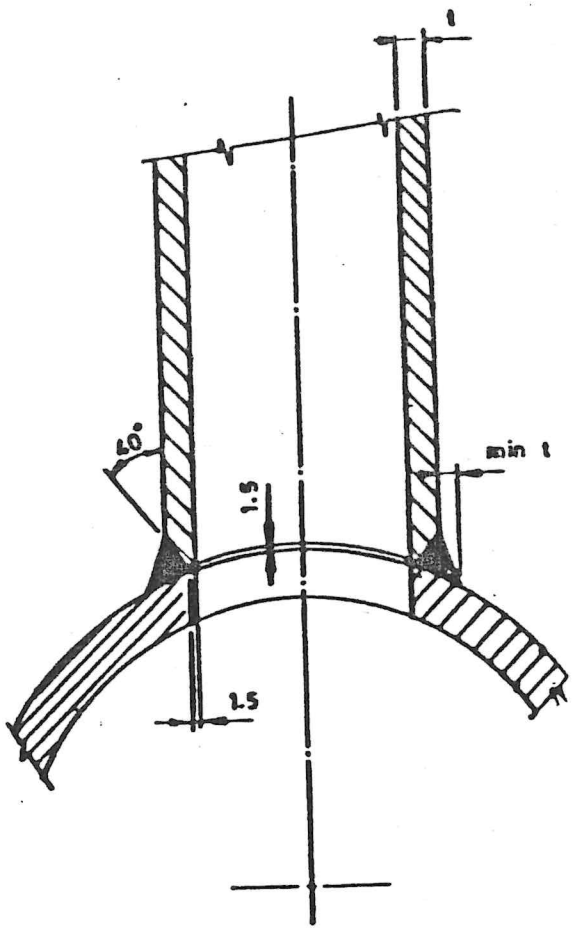

t - NOZZLE THICKNESS

FIGURE 365/29A

5. In the said regulations, in regulation 546, in sub-regulation (i), after the words "completion of all welding" occurring at the end, the following shall be added namely:-

"in accordance with regulation 562".

6. In the said regulations, in regulation 547, in sub-regulation (a), in the opening paragraph, for the words "The welding shall be stress-relieved", the following shall be substituted, namely:-

"The welding shall be stress-relieved in accordance with regulation 562".

(File No. 6(20)/93-Boilers)

(V.K. GOEL)
Secretary, Central Boilers Board.

Footnote:- The principal regulations were published in the Gazette of India as S.R.O. No.600 dated 15th September, 1950 and last amended vide Gazette notifications:-

(i) GSR 178 dated 24th March, 1990
(ii) GSR 179 dated 24th March, 1990
(iii) GSR 488 dated 9th October, 1993
(iv) GSR 516 dated 23rd October, 1993
(v) GSR 634 dated 25th December, 1993.
(vi) GSR 107 dated 26th February, 1994
(Corrigendum GSR 223 dated 14th May, 1994)
(vii) GSR 250 dated 4th June, 1994.
(viii) GSR402 dated 12th August, 1994.
(ix) GSR 427 dated 20th August. 1994.

The General Manager,
Government of India Press,
Mayapuri,
Ring Road,
NEW DELHI-110064.

(TO BE PUBLISHED IN THE GAZETTE OF INDIA, PART II, SECTION 3(i) AS G.S.R.)

Government of India
Ministry of Industry
(Department of Industrial Development)
Central Boilers Board.

...

New Delhi, the 23rd November, 1994.

NOTIFICATION

G.S.R.....WHEREAS certain draft regulations further to amend the Indian Boiler Regulations, 1950, were published as required by sub-section (1) of section 31 of the Indian Boilers Act, 1923 (5 of 1923) at pages 637 to 648 of the Gazette of India, Part II-section 3, sub-section (1), dated the 23rd April, 1994 under the notification of the Government of India in the Ministry of Industry (Department of Industrial Development) (Central Boilers Board) No. GSR 194 dated the 5th April, 1994 inviting objections and suggestions from all persons likely to be affected thereby till the 10th July, 1994;

AND WHEREAS the said Gazette was made available to the public on the 27th May, 1994;

AND WHEREAS no objections or suggestions have been received;

NOW, THEREFORE, in exercise of the powers conferred by section 28 of the Indian Boilers Act, 1923 (5 of 1923), the Central Boilers Board hereby makes the following regulations further to amend the Indian Boiler Regulations, 1950, namely:-

1. (1) These regulations may be called the Indian Boiler (Sixth Amendment) Regulations, 1994.

(2) They shall come into force on the date of their publication in the Official Gazette.

2. In the Indian Boiler Regulation, 1950 (hereinafter referred to as the said regulations), in regulation 2,-

(a) after clause (c), the following clause shall be inserted, namely:-

"(cc) "calculation pressure", in relation to a boiler, means the design pressure of any part adjusted to take into account the pressure drops corresponding to the most severe conditions of pressure drop and hydraulic head;"

Contd.

7. In the said regulations, for regulation 268, the following regulation shall be substituted, namely:-

"268. Hydraulic test at makers' works-

(a) Boiler drum and other cylindrical components having internal diameters greater than 600 millimetres shall be hydraulically tested on completion of manufacture at the makers' works in the presence of Inspecting Officer to 1½ times the maximum permissible working pressure without indication of weakness and defects.

(b) All components which are not reasonably accessible for inspection after assembly into the boiler or have been tested hydraulically prior to welding at a pressure less than that specified in sub-regulation (a) shall be tested hydraulically to 1½ times the maximum working pressure before assembly into the boiler.

(c) Tubular products that have been hydraulically tested to the required pressure prior to welding or ultrasonically tested shall not require further hydraulic testing as components provided they were joined during assembly by circumferential butt joint which have been welded and non-destructively tested as per relevant provisions of these regulations.

(d) Components other than tubular products shall not require hydraulic testing before assembly into the boiler if the completed boiler is tested hydraulically to 1½ times the maximum permissible working pressure at site.

(e) In case of drums, headers which are to be fitted with tubes, the test may be made before drilling of tube holes but after attachments of nozzles and similar fittings.

(f) The test pressure shall be raised gradually under proper control at all times so that it never exceeds by more than 6% of the required pressure and maintained for 30 minutes whereupon the pressure shall be reduced to maximum allowable working pressure and maintained for sufficient time to permit close visual inspection for leakages of the pressure parts.

(g) The temperature of water used as medium of pressure testing shall not be less than 20°C and more than 50°C.

(h) In case of drums of 'composite' construction and partly rivetted and partly welded seams or seamless forged drum shell with ends attached by fusion welding, the test pressure shall be the same as for fusion welded drums.

Contd.

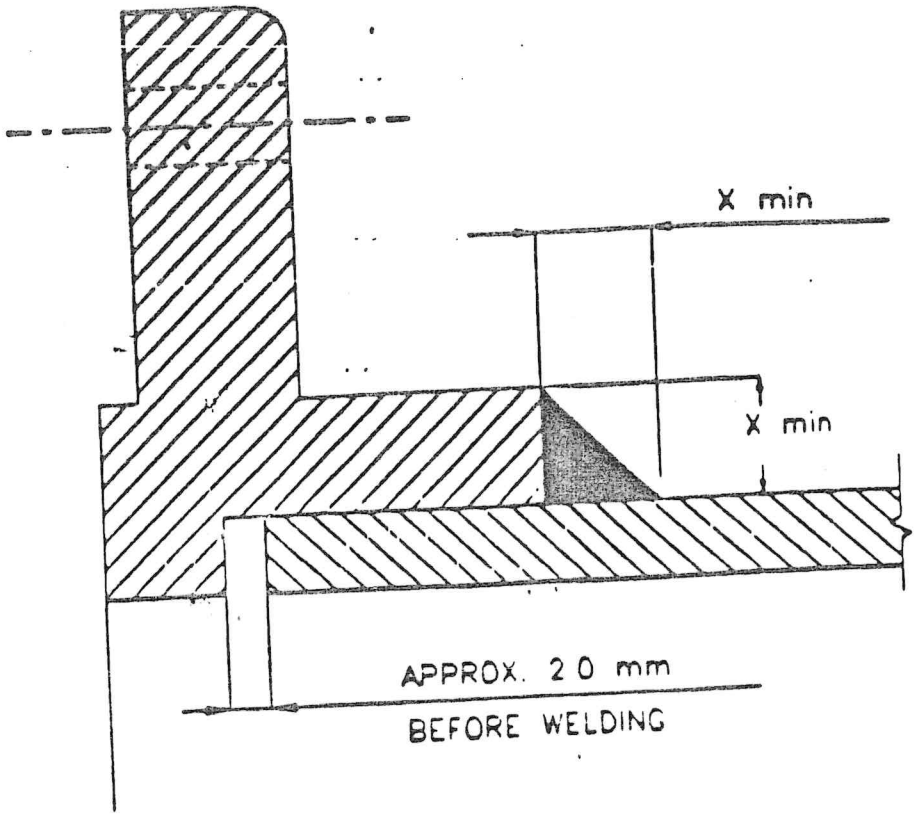

DIMENSION Xmin = 1.09 tn (NOMINAL PIPE WALL THICKNESS) OR THICKNESS OF FLANGE HUB, WHICHEVER IS SMALLER.

SOCKET WELDED FLANGE

FIGURE NO. 34A

(b) after type '7' and the entry relating thereto, the following shall be added, namely:-

"8, Socket welded flange Figure 34A.".

(c) in the design conditions, the following shall be added at the end, namely:-

"Type 8 flanges for all design pressure and temperature conditions. This type shall be used only for pipes upto and including 51 mms (2 inches) nominal bore. These flanges shall not be used where severe erosion or corrosion is expected to occur.".

(d) after figure 34, the following figure shall be inserted, namely:-

calculated from the formulae in these regulations shall be reduced as per the table given below:-

TABLE

Age of boiler exceeding (in years)	25	35	45	50	60	70	80	90	100
Maximum permitted working pressure percent.	95	90	85	80	70	60	50	40	30

(ii) For those boilers the plates of which have already been cut and tested under regulation 7 and this regulation shall be given a further lease of life of 50 years from the date of the test of the boilers. The working pressure that shall be allowed after the testing shall be reduced as per the table given below:-

TABLE

Period after date of test (in years)	10	20	30	40	50
Maximum working pressure allowed (percentage).	90	80	70	50	30

(b) Water Tube Boilers:

(i) The boilers which are operating at a temperature of 400°C and above including utility/industrial boilers and all boiler parts operating in the creep range of the boiler shall be non-destructively tested after they are in operation for 100,000 hours for assessment of the remanent life of the parts;

(ii) The parts of a boiler when it completes a life of 25 years are to be tested for assessment of the remanent life of such parts. If results are acceptable as per the standard laid down by the Central Boilers Board a certificate shall be issued by the Chief Inspector of Boilers for extending the life of the boiler for a further period of 10 years or such less period as recommended by the Remanent Life Assessment Organisation. This assessment of remanent life shall be carried out

Contd.

18. In the said regulation, after regulation 395F, the following regulation shall be inserted, namely:-

395G. Fee for inspection of spares and scantlings:-

The fees for inspection of spares and scantlings shall be charged as under:-

(a) For outside surface area not exceeding 10sq.ft. ($0.93m^2$) .....Rs.300.

(b) For outside surface area exceeding 10sq.ft. ($0.93m^2$) but not exceeding 30sq.ft. ($2.79m^2$) .....Rs.400.

(c) For OSA exceeding 30sq.ft. ($2.79m^2$) but not exceeding 50sq.ft. ($4.65m^2$).....Rs.450.

(d) For OSA exceeding 50sq.ft. ($4.65m^2$) but not exceeding 70sq.ft. ($6.50m^2$).....Rs.550.

(e) For OSA exceeding 70sq.ft. ($6.50m^2$) but not exceeding 90sq.ft. ($8.36m^2$).....Rs.650.

(f) For OSA exceeding 90sq.ft. ($8.36m^2$) but not exceeding 110sq.ft.($10.22m^2$).....Rs.750.

19. In the said regulations, in regulation 545, after sub-regulation (c), the following sub-regulation shall be inserted, namely:-

"(cc) In the construction of unfired boilers when the dished ends do not form a part of the heating surface, cold spun dished ends conforming to IS:2825 may be used.".

20. In the said regulations, in regulation 554, for figures XII/53, XII/54 and XII/56, the following figures shall be respectively substituted, namely:-

Figure No.XII/53,XII/54 and XII/56
to be printed here.

Contd.

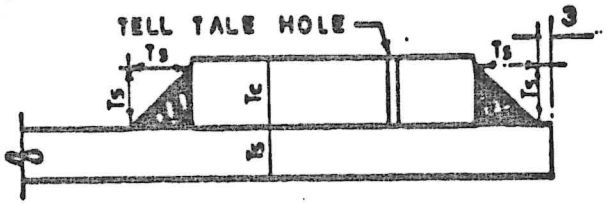

Figure No. XII/53

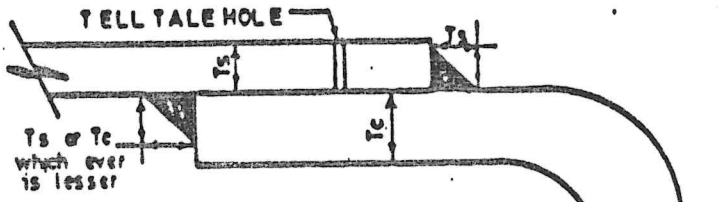

Figure No. XII/54

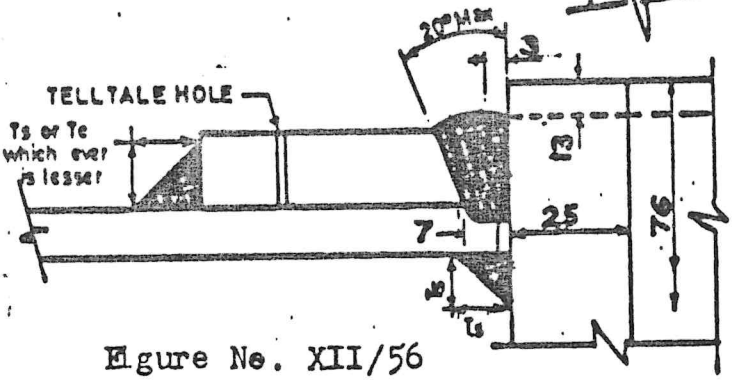

Figure No. XII/56

For gothic bars/scelps, billets and hot rolled strips which are to be processed further by the same manufacturer for making tubes/pipes, the physical properties are not required to be mentioned by the steel manufacturer.".

23. In the said regulations, for Appendix J, the following Appendix shall be substituted, namely:-

"APPENDIX J

Inspection and Testing of Boilers during construction.

GENERAL

The Inspecting Authority shall have access to the works of the manufacturer at all reasonable times and shall inspect the manufacture of the boiler at least at the following stages and may reject any part that does not comply with the requirements of the Indian Boiler Regulations, 1950. In case of any doubt, the Inspecting Authority may examine at any stage other than the stages stipulated below. The manufacturer shall give at least 4 working days' notice to the Inspecting Authority/Inspecting Officer before reaching each stage. Before undertaking any of the stage inspections, the Inspecting Authority/Inspecting Officer shall satisfy himself that the testing equipment/instrument has been properly calibrated.

Inspection during construction

Each boiler shall be inspected during construction by an Inspecting Officer nominated by the Inspecting Authority. Sufficient inspections shall be made to ensure that the materials, construction and testing conform to the requirements of these regulations.

Stages of inspection during construction

A. Shell Type Boilers

(a)(i) Check the identification markings on the plate with those recorded on the plate makers' certificates;

(ii) Check the reported result of the mechanical and chemical properties on the plate makers' certificates against the requirements of the Indian Boiler Regulations, 1950.

(iii) Witness the marking of the test plates for identification before they are cut from the parent plate or plates.

(b) When the Shell plate and end plates have been formed with plate edges prepared for welding and test plates are attached;

(c) When the welding of main cylindrical shell is completed and checked for circularity;

Contd.

(f) When each drum or header is prepared to receive any compensation plates and attachments, and when at least 10% of each type of branch or tube stub is set up ready for welding;

(g) When all welding on each drum or header is complete, the Inspecting Authority will check the records of heat treatment, and mark off of specimens for preparation and testing from test plates;

(h) At hydraulic test followed by external and internal examination and testing and stamping. On alloy steel drums thicker than 50 millimetres and high carbon steel drums thicker than 100 millimetres further non-destructive examination shall be done on drums, nozzle and stub weld after stress relief;

(i) Any drum having tube holes drilled subsequently to the hydraulic test shall be further examined on completion of this work and prior to despatch from the manufacturers work.

C. Seamless Drums and Headers

(a) When material is ready for identification with the steel makers' Certificates of manufacture and test, also when each cylinder is prepared for forming, or welding of separate end closures and to identify test plate material;

(b) When each plain shell drum or header is prepared to receive compensation plates and attachments and a representative number of stand pipes, tubes or tube stubs, are set up ready for welding;

(c) When all welding on each drum is complete and the radiographs or ultrasonic test records are available the Inspecting Authority shall check the record of heat treatment and the marking off preparation and testing of specimens from test plates;

(d) At hydraulic test, followed by external and internal examination and stamping. On thick drums of high carbon or alloy material further non-destructive examination shall be done on drum nozzle and stub welds after stress relief.

D. Tubes and Internal Pipings.

(a) When the tubes or pipes are ready for identification with the tube makers' certificate at the boiler makers' works and at least 10% of tubes and pipes are set up ready for welding;

(b) When all welding of tubes or pipes and their attachments are complete and the non-destructive examination report/ records are available for scrutiny.

Contd.

Note:-Notwithstanding anything specified above when the pipes/tubes are manufactured by well-known pipes/tubes makers recognised under the Indian Boiler Regulations, 1950 by the Central Boilers Board, all the above stages of inspections shall be carried out and certified by the manufacturers of pipes and tubes themselves and records maintained. The certificates so issued by the manufacturers in the prescribed forms of Indian Boiler Regulations, 1950 shall be accepted by the Inspecting Authority for further use.

4. Inspection and tests to be carried out at the Fabricators' Works for fabrication of items.

For parts manufactured from the tubes/pipes at the manufacturers' works either by manipulation or fabrication.

(a) Identification of materials;

(b) Checking of dimensions;

(c) Hydraulic test.

F. Valves and Mountings

(a) When pre-casting materials are ready for examination and selection for tests;

(b) When the test specimens are ready for test;

(c) Non - Destructive Testing as required under Indian Boiler Regulation.

(d) When the parts are machined and assembled and are ready for dimensional check in accordance with the drawings approved by the Inspecting Authority.

(e) Hydraulic test as per approved drawings.

Note:-Notwithstanding anything specified above, in case of Well-known Foundries/Forges, etc., the first two stages of inspection will be carried out by the Foundries/Forges themselves, and certified and record maintained. The certificates so issued shall be accepted by the Inspecting Authority for further use.

(File No. 6(10)/92-Boilers)

(V.K. GOEL)
Secretary, Central Boilers Board.

Contd.

(TO BE PUBLISHED IN THE GAZETTE OF INDIA, PART II SECTION 3(i) AS G.S.R.)

Government of Indian
Ministry of Industry
(Department of Industrial Development)
Central Boilers Board.

New Delhi, the 27th January, 1995.

NOTIFICATION

G.S.R.....WHEREAS a draft of certain regulations further to amend the Indian Boiler Regulations,1950,was published as required by sub-section (1) of section 31 of the Indian Boilers Act, 1923 (5 of 1923) at pages 694 to 710 of the Gazette of India, Part-II, Section 3, Sub-section (1), dated the 30th April, 1994 under the notification of the Government of India in the Ministry of Industry (Department of Industrial Development) (Central Boilers Board) number GSR 210 dated the 13th April, 1994 inviting objections and suggestions from all persons likely to be affected thereby till the expiry of forty-five days from the date on which copies of the Gazette containing the said notification were made available to the public;

AND WHEREAS the said Gazette was made available to the public on the 27th May, 1994;

AND WHEREAS no objections or suggestions have been received;

NOW THEREFORE, in exercise of the powers conferred by section 28 of the Indian Boilers Act, 1923 (5 of 1923), the Central Boilers Board hereby makes the following regulations further to amend the Indian Boiler Regulations, 1950, namely:-

1. (1) These regulations may be called the Indian Boiler (Amendment) Regulations, 1995.

(2) They shall come into force on the date of their publication in the Official Gazette.

2. In the Indian Boiler Regulations, 195) (hereinafter referred to as the said regulations), in regulation 215,-

(i) for the sub-regulation (d), the following sub-regulations shall be substituted, namely:-

"(d)(i) When bending stresses due to weight are negligible and the tube holes are arranged along a diagonal line with respect to the longitudinal axis, the efficiency (z) of corresponding ligaments is given in Figure 14, with the ratio b/a on the abscissa and the ratio

$$\frac{2a-d}{2a} \text{ or } \frac{d}{a}$$ used as a parameter.

Contd.

(iii) In the case of a regular staggered spacing of tube holes, (see Figure 13A, the smallest value of the efficiency z of all the ligaments, longitudinal, circumferential, and diagonal, is given in Figure 15 by the ratio $\frac{Pc}{PL}$ on the abscissa, and the ratio

$$\frac{PL - d}{PL} \quad \text{or} \quad \frac{d}{a} \quad \text{used as a parameter}$$

where,

d = diameter of the tube holes;
Pc = 2b = twice the distance between circumferential rows of holes;
PL = 2a = twice the distance between axial rows of holes.

NOTE: The dimension Pc should be measured on the flat plate before rolling or on the median line after rolling. The data on Figure 15 are based on the same formulae as shown in Figure 13A.

(e): When holes spaced longitudinally along a drum are not in a straight line, the equivalent longitudinal pitch for each spacing may be used in the application of the above rules. The equivalent pitch is obtained by multiplying the actual longitudinal pitch by the equivalent efficiency obtained from Figure 14 for each spacing.".

(ii) For figures 13, 14 and 15, the following figures shall be substituted, m namely:-

(Figures 13A, 13B, 13C, 14 and 15 to be printed here.)

Contd.

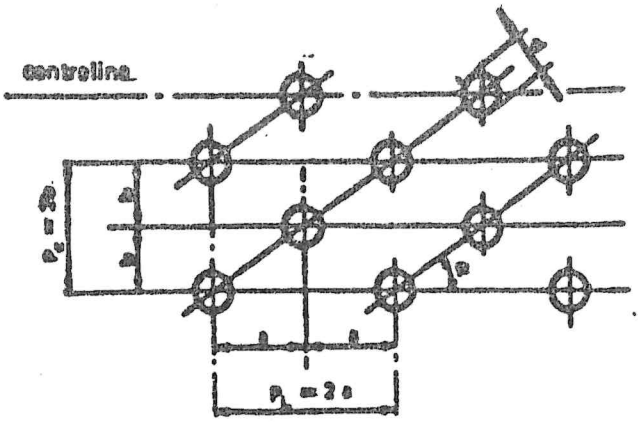

Figure 13A - Regular staggering of holes

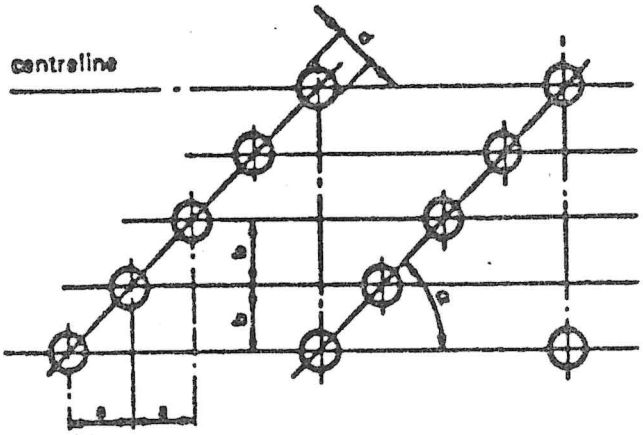

Figure 13B - Spacing of holes on a diagonal line

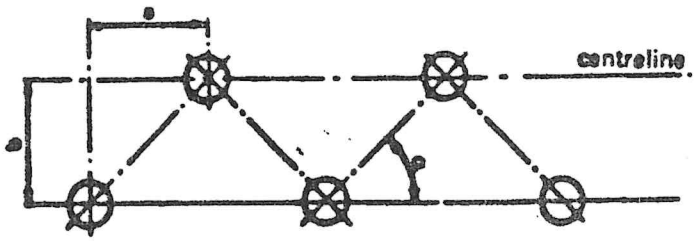

Figure 13C - Regular saw-tooth pattern of holes

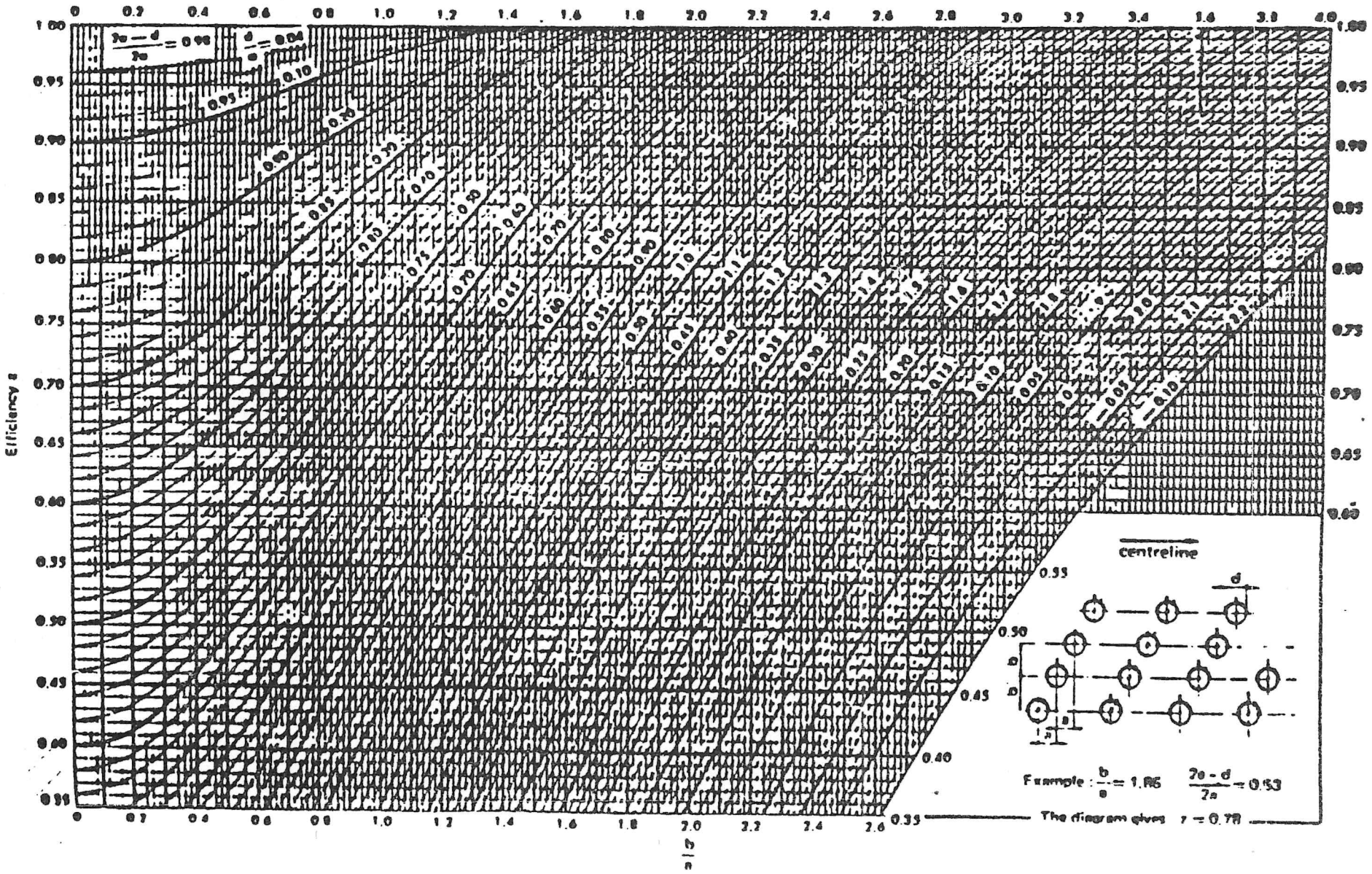

Figure 14—Efficiency of ligament along a diagonal line

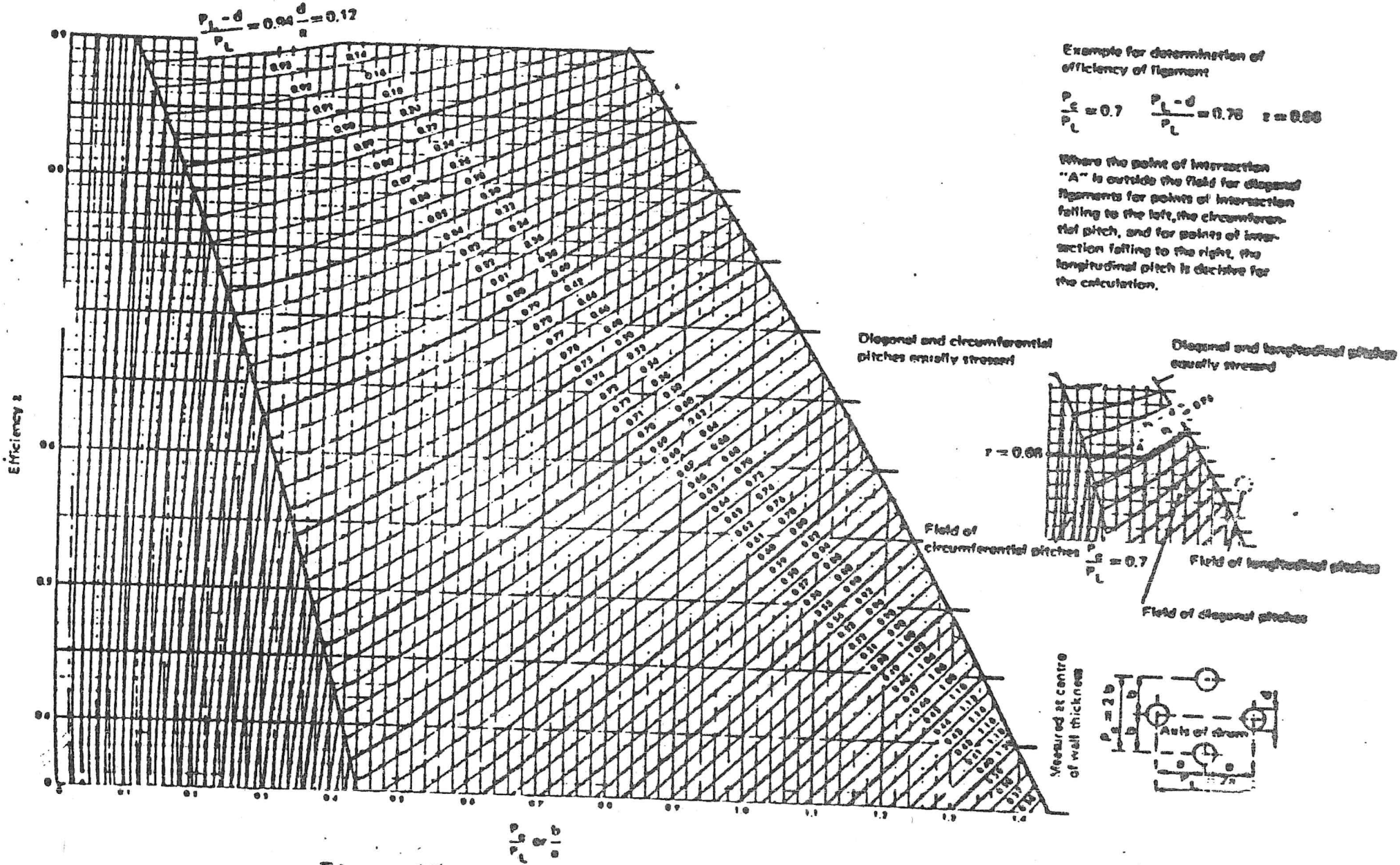

Figure 15 Efficiency of ligaments between holes

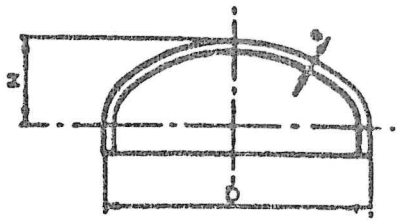

Figure 23A - Elliptical Head

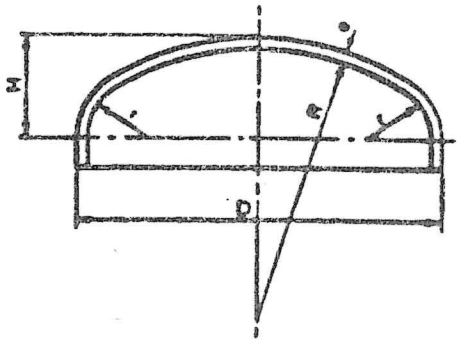

Figure 23B - Torispherical head

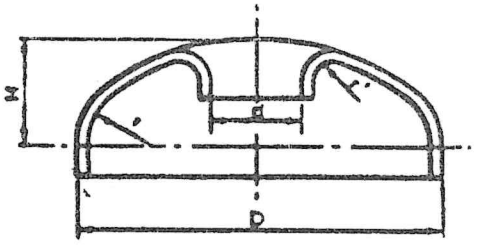

Figure 23C - Head with manhole
(elliptical or torispherical)

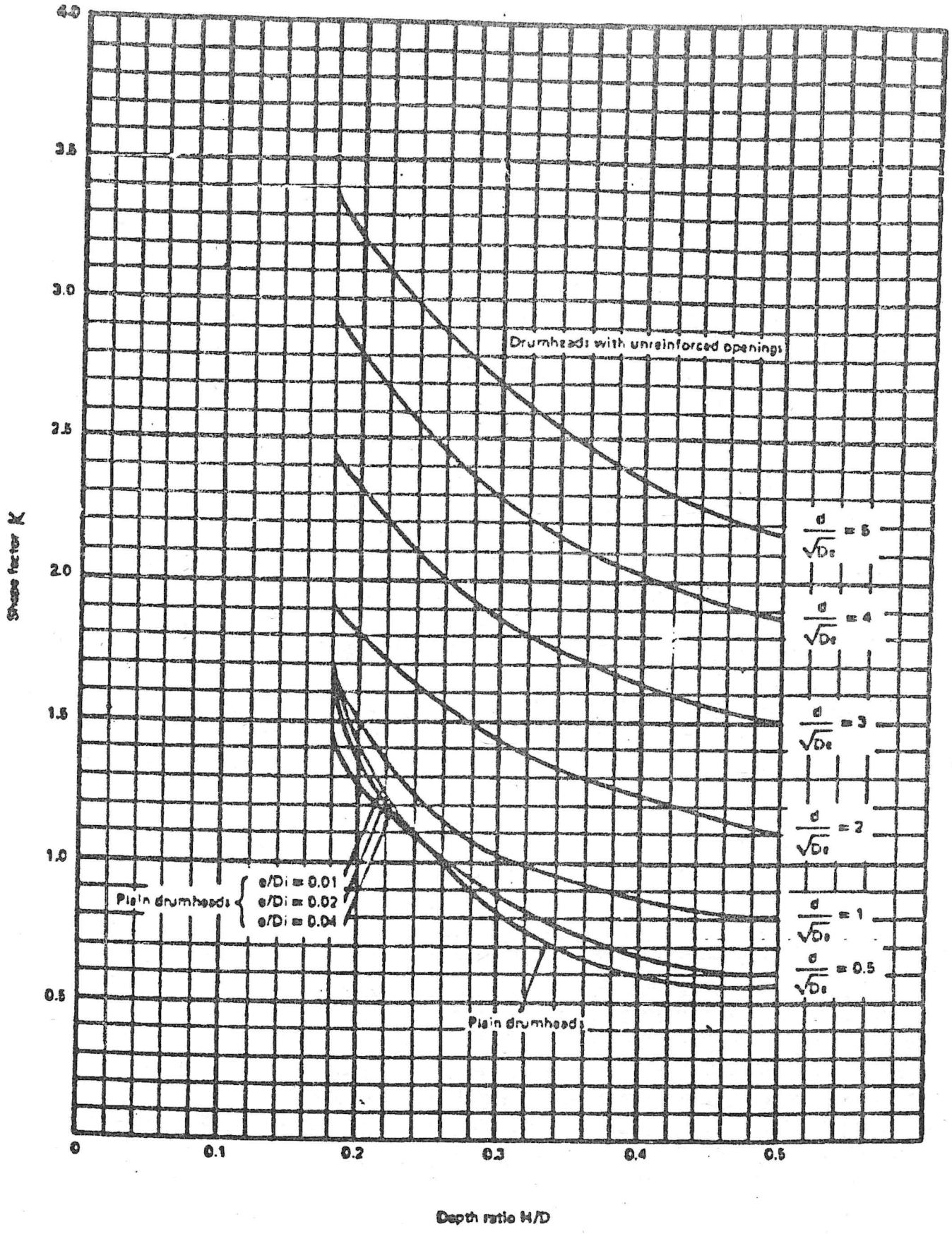

Figure 23D-Graph of shape factor K for dished heads.

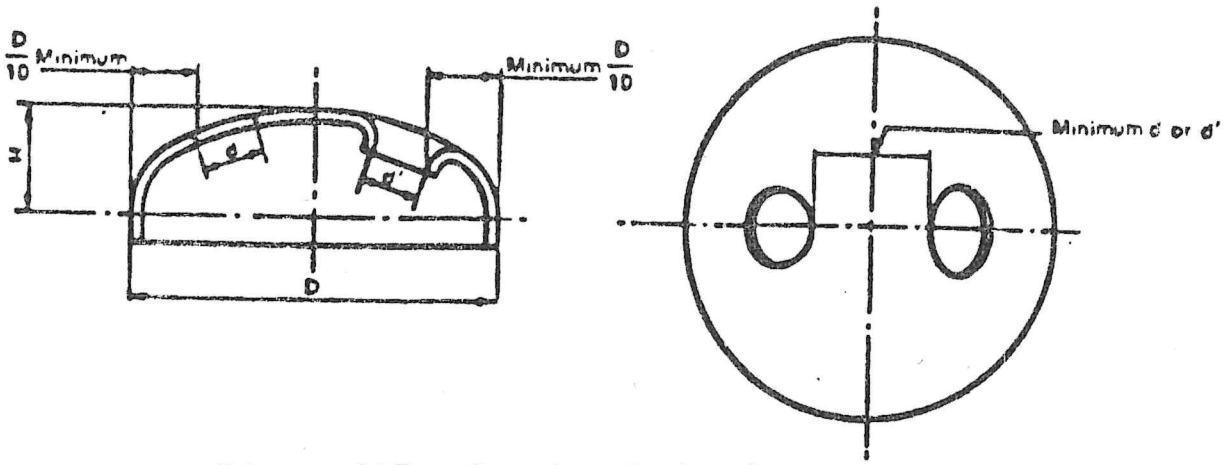

Figure 23E - Opening in heads

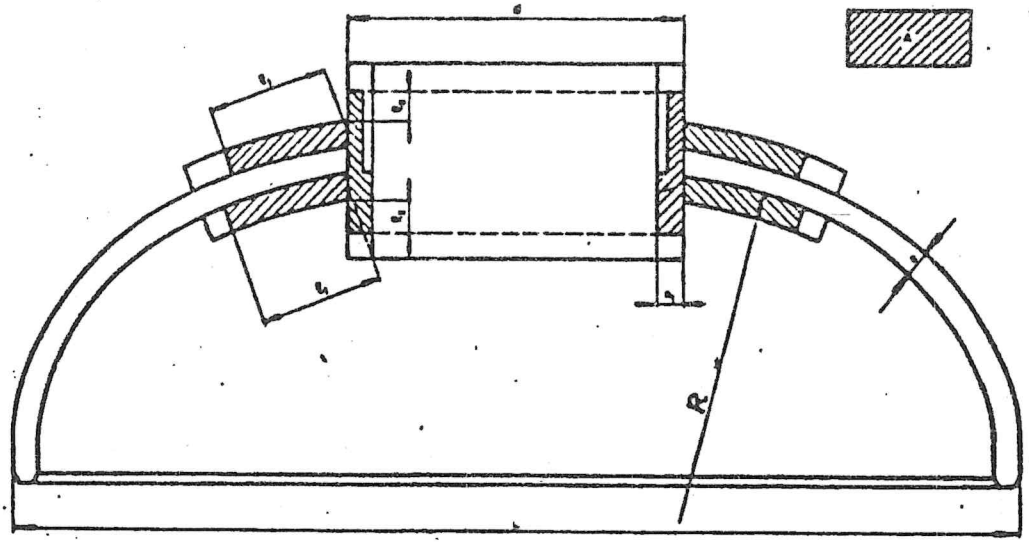

Figure 23F Reinforced opening.

4. In the said regulations, for regulation 277, the following regulation shall be substituted, namely:-

"277 Dished end with opening:-

(a) Heads with openings:- (i) Holes cut in the heads (manholes or tube holes) should be round or elliptical.

(ii) Small size openings complying with conditions of sub-regulation (c) do not require any additional thickness of head or reinforcement of opening.

(iii) Large size openings require an increase in thickness of the head, according to sub-regulation (b) or a reinforcement of the opening according to sub-regulation (d).

(b) Shape factor K for heads with large unreinforced openings:- The shape factor K to be used in calculating the thickness of heads varies depending on the height of the head H and on the dimensions of the largest opening. The value of K is indicated in Figure 23D, by means of curves, each of which corresponds to a value of the ratio.-

$$\frac{d}{\sqrt{DT}}$$

where,-

d = diameter of the largest opening in the head (in the case of an elliptical opening, the larger diameter of the ellipse);

D = outside diameter of the head; and

T = minimum thickness after dishing.

In addition, the following conditions shall be satisfied:

$$\frac{T}{D} \leq 0.1$$

$$\frac{d}{D} \leq 0.5$$

Contd.

A = effective cross-section of reinforcement.

This effective area A corresponds, within the Limits given below, with the actual cross-section of the reinforcing plates and with the cross-section of the nozzle decreased by the cross-section necessary to support the pressure, for those parts of the nozzle situated outside the internal surface of the head.

The shape factor K can then be read from Figure 23D, corresponding to the ratio

$$\frac{d'}{\sqrt{DT}}$$

The maximum limits for the area of reinforcement that should be taken into account are

(a) $L1 = \sqrt{2\ RT}$. for the width of a reinforcing plate;

(b) $L2 = \sqrt{d\ Tt}$ for the length of a nozzle

where,-

R = internal radius of the spherical part of the head (or for elliptical heads the internal radius of curvature of the meridian at the centre of the opening).

Tt = actual thickness of the nozzle,

L1 and L2 = diamensions given in Figure 1 23F

The position of the outer edges of the reinforcement shall comply with the provisions of sub-regulation (b) and Figure 23E.

In cases where the allowable stress of a part of the reinforcement is lower than that of the head, the corresponding area A should be multiplied by the ratio:

$$\frac{\text{allowable stress of the reinforcement material}}{\text{allowable stress of the head material.}}$$ ".

5. In the said regulations,-

(i) for regulation 278, the following regulation shall be substituted, namely:-

"278. End plate subject to pressure on the concave side.-

Contd.

(TO BE PUBLISHED IN THE GAZETTE OF INDIA, PART II SECTION 3(i) AS G.S.R.)

Government of India
Ministry of Industry
(Department of Industrial Development)
Central Boilers Board.

New Delhi, the 14th February, 1995.

NOTIFICATION

G.S.R. WHEREAS a draft of certain regulations, further to amend the Indian Boiler Regulations, 1950, was published as required by sub-section (1) of section 31 of the Indian Boilers Act, 1923 (5 of 1923) at page 595 to 601 of the Gazette of India, Part II, Section 3, Sub-section (1), dated the 16th April, 1994, under the notification of the Government of India in the Ministry of Industry (Department of Industrial Development) (Central Boilers Board) No. GSR 181 dated the 29th March, 1994 inviting objections and suggestions from all persons likely to be affected thereby till the 24th June, 1994 ;

AND WHEREAS the said Gazette was made available to the public on the 11th May, 1994 ;

AND WHEREAS no objections or suggestions have been received;

NOW, THEREFORE, in exercise of the powers conferred by section 28 of the Indian Boilers Act, 1923 (5 of 1923), the Central Boilers Board hereby makes the following regulations further to amend the Indian Boiler Regulations, 1950, namely :-

1. (1) These regulations may be called the Indian Boiler (Second Amendment) Regulations, 1995.

(2) They shall come into force on the date of their publication in the Official Gazette.

2. In the Indian Boiler Regulations, 1950 (hereinafter referred to as the said regulations), for regulation 187, the following regulation shall be substituted, namely:-

"187. Uncompensated Holes in Water Tube Boilers.-The maximum diameter of any unreinforced opening shall not exceed 'd' as shown in Figures 9B and 9C subject to a maximum of 203 millimetres.

The notations in Figures 9B and 9C are defined as follows:

$$K = \frac{P.D.}{1.82fe} \quad \text{.....Eqn.20 -}$$

Contd.

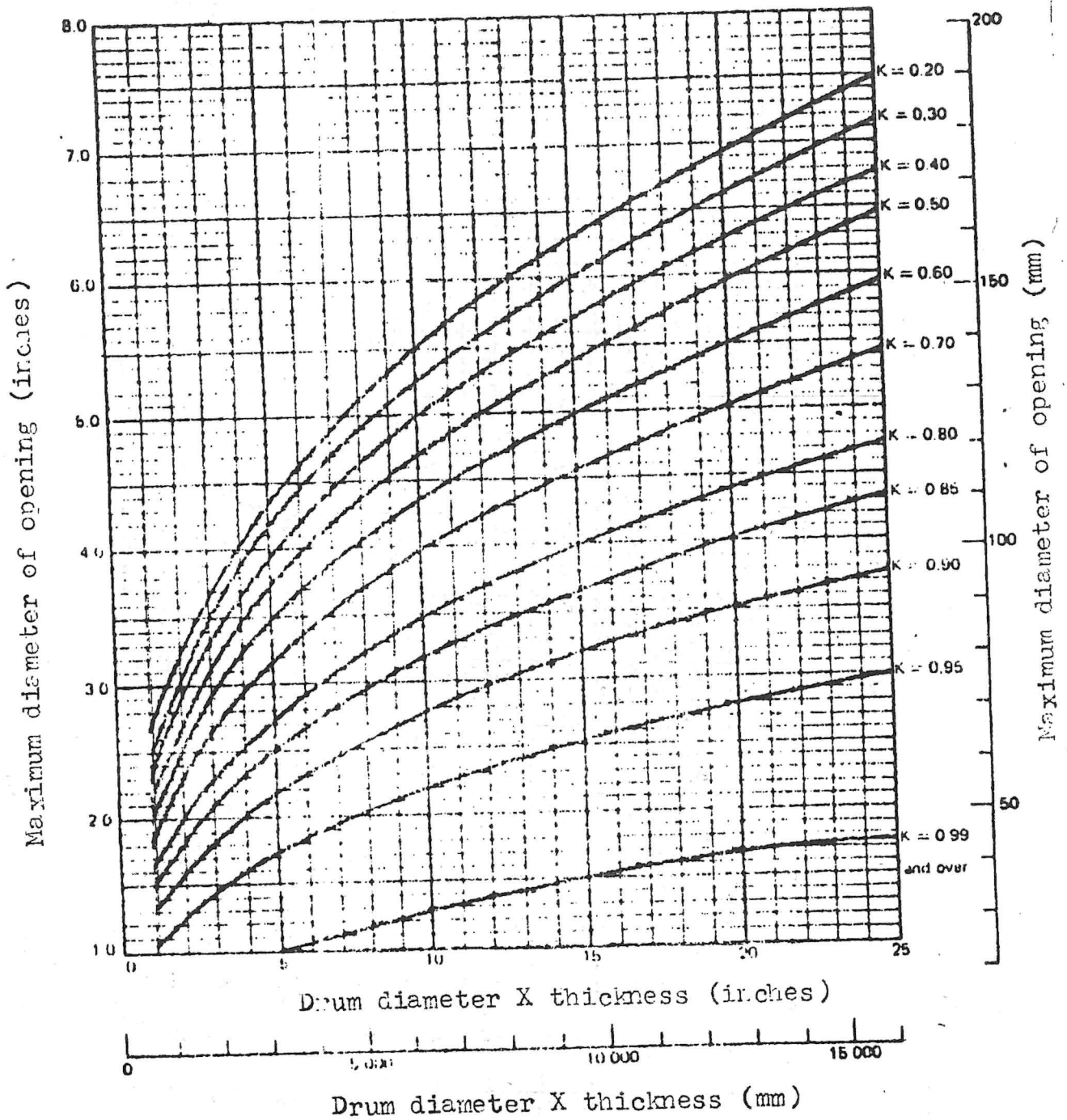
Maximum diameter of opening (inches)
8.0
7.0
6.0
5.0
4.0
3.0
2.0
1.0
0
5
10
15
20
25
K = 0.20
K = 0.30
K = 0.40
K = 0.50
K = 0.60
K = 0.70
K = 0.80
K = 0.85
K = 0.90
K = 0.95
K = 0.99
and over
200
150
100
50
Maximum diameter of opening (mm)
Drum diameter X thickness (inches)
0
5 000
10 000
15 000
Drum diameter X thickness (mm)

Figure 9B

6. In the said regulations, in regulation 349, in Table 2, against the entries "carbon steel" and "cast steel", under the column "maximum permissible temperature",-

(a) under the sub-heading 'oC', for the entry "482", wherever it occurs, the entry "454" shall be substituted;

(b) under the sub-heading "oF", for the entry "900", wherever it occurs, the entry "850" shall be substituted.

7. In the said regulations, in regulation 350, the following Note shall be added at the end, namely:-

"Note: In case Sc values are not available in Material Standard and such materials are known to have been used in boilers in India or abroad, then for such materials, the allowable stress may be taken as the lower of $\frac{Et}{1.5}$ or $\frac{Sr}{1.5}$."

8. In the said regulations, in regulation 360, in sub-regulation (d), in clause (4) relating to Tests for class II pipelines, after sub-clause (iii), the following shall be inserted, namely:-

"(iv) Notwithstanding anything contained in sub-clauses (ii) and (iii), the bend tests shall be dispensed with in case the welds have been non-destructively tested in the following manner:-

A. "Piping over 102 mm (4 in.) bore:- Five per cent of the welds made by each welder on a pipeline with a minimum of two welds per welder, selected at random shall be subjected to a non-destructive examination by radiographic or other approved methods.

B. Piping 102 mm. (4 in.) bore and under - One per cent of the welds made by each welder on a pipeline with a minimum of one weld per welder, selected at random shall be subjected to non-destructive examination by radiographic or other approved techniques."

9. In the said regulations, for regulation 573, the following regulation shall be substituted, namely:-

"573. Stand pipes and branches -

(a) The thickness and bolting of all flanges for joining the mountings and fittings shall be in accordance with the diamensions as laid down in Appendix-E- to these regulations. In no case, however, shall the thickness of flanges be less than 13 mm.

(b) (i) The Wall thickness of nozzles and other connections shall not be less than that specified for the applicable loading, namely, internal pressure, bending and static loads.

Contd.

(TO BE PUBLISHED IN THE GAZETTE OF INDIA, PART-II, SECTION 3(i) AS G.S.R.)

Government of India
Ministry of Industry
(Department of Industrial Development)
Central Boilers Board

...

New Delhi, the 24th October, 1996

NOTIFICATION

G.S.R... WHEREAS certain draft regulations further to amend the Indian Boiler Regulations, 1950 were published, as required by sub-section (1) of section 31 of the Indian Boilers Act, 1923 (5 of 1923) at pages 407-408 of the Gazette of India, Part-II, Section 3, Sub-Section (i), dated the 4th March, 1995 under Notification of the Government of India in the Ministry of Industry (Department of Industrial Development) (Central Boilers Board) number G.S.R. 95 dated the 20th February, 1995, inviting objections and suggestions from all persons likely to be affected thereby till the expiry of forty-five days from the date on which copies of the Gazette in which the said notification was published were made available to the public;

AND WHEREAS the said Gazette was made available to the public on the 14th March, 1995;

AND WHEREAS the objections and suggestions received from the public were considered by the Central Boilers Board.

NOW, THEREFORE, in exercise of the powers conferred by section 28 of the Indian Boilers Act, 1923 (5 of 1923), the Central Boilers Board hereby makes the following regulations further to amend the Indian Boiler Regulations, 1950, namely:-

1. (1) These regulations may be called the Indian Boiler (Amendment) Regulations, 1996.

(2) They shall come into force on the date of their publication in Official Gazette.

2. In the Indian Boiler Regulations, 1950 for regulation 7, the following shall be substituted, namely:-

"7. Registration of second hand boilers not in accordance with the standard conditions:- If a second hand boiler is not conforming to the requirements of these regulations for its registration, then the same shall not be registered except in the following cases, namely:-

(i) Water Tube Boilers- Where the documents required under its code of manufacture for its registration are furnished and its workmanship is not in any way doubtful, the second hand water Tube Boiler may be registered by reducing the working pressure of the parts of the boiler as calculated from these regulations by ten percent.

Kind attn. Sh. Vishnu Saran
Director of Boilers

Contd.

Provided that a higher working pressure, being not more than the working pressure allowed by the code of manufacture, may be allowed on the recommendation of the Board made by it on the basis of life assessment tests carried out on the boiler.

(ii) Shell Type Boilers- Where the documents required under its code of manufacture, for its registration are furnished, the second hand Shell Type Boiler may be registered by reducing the working pressure of the parts of the boiler as calculated under these regulations as per the table given below:-

Age of boiler (from the date of first use) in years.	25	35	45	50	60	70	80	90	100
Reduction in working pressure (percent)	5	10	15	20	30	40	50	60	70

(V.K. Goel)
Secretary, Central Boilers Board.

(File No.6(10)/91-Boilers)

Footnote:-The prinicipal regulations were published in the Gazette of India as S.R.O. 600 dated 15th September, 1950 and last amended vide Gazette notifications-

(i) GSR 178 dated 24th March, 1990;
(ii) GSR 179 dated 24th March, 1990;
(iii) GSR 488 dated 9th October, 1993;
(iv) GSR 516 dated 23rd October, 1993;
(v) GSR 634 dated 25th December, 1993;
(vi) GSR 107 dated 26th February, 1994;
(Errata GSR 223 dated 14th May, 1994)
(vii) GSR 250 dated 4th June, 1994;
(viii) GSR 402 dated 12th August, 1994;
(ix) GSR 427 dated 20th August, 1994;
(x) GSR 562 dated 12th November, 1994;
(xi) GSR 607 dated 10th December, 1994;
(xii) GSR 83 dated 25th February, 1995;
(xiii) GSR 93 dated 4th March, 1995.

To

The General Manager,
Government of India Press,
Mayapuri, Ring Road,
New Delhi-110064.

TO BE PUBLISHED IN THE GAZETTE OF INDIA, PART II SECTION 3(i) AS G.S.R.

Government of India
Ministry of Industry
(Department of Industrial Development)
Central Boilers Board

New Delhi, the 6th December, 1996.

NOTIFICATION

G.S.R. WHEREAS certain draft regulations, further to amend the Indian Boiler Regulations, 1950, were published as required by sub-section (1) of section 31 of the Indian Boilers Act, 1923 (5 of 1923) at page No.2509-2544 of the Gazette of India, Part II, Section 3 Sub-section (i), dated the 25th November, 1995 under the notification of the Government of India in the Ministry of Industry (Department of Industrial Development) (Central Boilers Board) No. GSR 499 dated the 9th November, 1995 inviting objections and suggestions from all persons likely to be affected thereby till the expiry of a period of forty-five days from the date the gazette containing this notification is made available to the public;

AND WHEREAS the said Gazette was made available to the public on the 6th December, 1995.

AND WHEREAS objections/suggestions have been received and considered;

NOW THEREFORE, in exercise of the powers conferred by section 28 of the Indian Boilers Act, 1923 (5 of 1923), the Central Boilers Board hereby makes the following regulations further to amend the Indian Boiler Regulations, 1950, namely:-

1. (1) These regulations may be called the Indian Boiler (Second Amendment) Regulations, 1996.

(2) They shall come into force on the date of their publication in the Official Gazette.

2. In the Indian Boiler Regulations, 1950 (hereinafter referred to as the said Regulations), in regulation 545,-

(i) in sub-regulation (e) in paragraph (v), after the word and figures, "Figure XII/12", the following word, letter and figures shall be inserted, namely:-

"or XII/12A";

(ii) after figure XII/12, the following figure shall be inserted, namely:-

Contd.

3. In the said regulations, in regulation 546,-

(i) for sub-regulation (g), the following sub-regulations shall be substituted, namely:-

"(g) The minimum mean internal diameter of furnaces shall not be less than those given in Figure XII/20A depending on the net heat input.

(gg) Where furnace flue is made up of plain or corrugated sections or both, they may be connected to each other by fusion buttwelded circumferential seams.

(ggg) (i) Plain furnaces shall not exceed 3m. in length except in the case of reverse flame boilers, which are considered to be inherently flexible or as provided in clause (ii). In all other cases flexibility shall be provided in the furnace by means of corrugations or bowling hoops or stepping of a minimum of 150 mm in the diameter of the furnace. See figures XII/20B to XII/20F.

If corrugations are used to provide flexibility; at least one-third of the furnace length shall be corrugated.

Breathing spaces as per sub-regulation (i) of regulation 590 shall be provided for boilers made as per this clause.

(ii) Notwithstanding the provisions of clause (i), plain furnaces longer than 3m. are allowed to be used in a boiler when the length between boiler end plates do not exceed 6.5 metres provided that breathing spaces used in this case are in accordance with sub-regulation (ii) of regulation 590.".

(ii) after figure XII/20, the following figure shall be inserted, namely:-

(Figures XII/20A, XII/20B, XII/20C, XII/20D, XII/20E, and XII/20F shall be printed here)

(iii) in sub-regulation (j), for the word, letters and figure "and XII/16", the following word, letters and figures shall be substituted, namely:-

",XII/16 and XII/16A";

Contd.

6. In the said regulations, for regulation 564, the following regulation shall be substituted, namely:-

"564. Shells - (a) The working pressure of cylindrical shells for Class I boilers shall be determined in accordance with regulations 270 and 271.
(b) The working pressure of cylindrical shells for Class II and Class III boilers shall be determined by the following formula:

$$WP = \frac{(t - 1.5)SC}{0.7\ D} \qquad \text{Equation XII/1}$$

Where-

t is minimum thickness of shell plate in mm.

WP is working pressure in kg/cm^2.

D is maximum internal diameter in mm.

S is minimum tensile strength of plate in kg/mm^2.

C is a constant, as given below.

In no case, however, shall the factor of safety of the shell be less than 4 or the plate thickness be less than specified in Table XII/3 given under Regulation 563.

C = 27 where Class II requirements are complied with.

C = 23 for Class III boilers when stress relieved.

C = 21 for Class III boilers when not stress relieved.

Where boilers have a nest or nests of horizontal tubes, so that there is a direct tension on the tube plates due to the vertical load on the boiler ends or to tube plates acting as horizontal ties across the shell:

(i) each alternate tube in the outer vertical row of tubes shall be a stay tube.

(ii) the thickness of tube plates and the spacing of the tubes shall be such that the section of metal taking the load is sufficient to keep the stress within that allowed on the shell plate, as determined by the following formula:-

$$WP = \frac{(t - 2)\ SJ}{2D} \qquad \text{Equation XII/2}$$

Contd.

(1) C = 0.33 for flanged connections;

NOTE : d is the diameter of the largest circle taken from the commencement of the curvature of the flange.

(2) C = 0.40 for stays screwed in plate with nut or screwed and welded, or plain end strength welded on the outside;

(3) C = 0.33 for screwed bar stays with washer of not less than 3.5 times the diameter of bar stay;

(4) C = 0.31 for screwed bar stays with reinforcing plate, washer and nut on the outside.

NOTES:

1. If the plate is stayed in any other way, average values of C shall be taken into account.

2. If the plate is flame swept, the thickness shall be increased by 10%.

3. The welding materials used in the manufacture of these plates shall not have the ultimate tensile strength less than that of the plate used.

8. In the said regulations, for regulation 575, the following regulation shall be substituted, namely:-

" 575. Flat crown plates for vertical boilers.-

(i) Flat crown plates shall be supported by the uptake and/or bar stays.

(ii) The inside radius of curvature of the flange to the shell or fire box shall be not less than four times the thickness of the plate and in no case less than 63 mm. where the plate is flanged for attachment to the uptake, the inside radius of curvature of the flange shall be not less than twice the thickness of the plate and in no case less than 25 mm.

(iii) The thickness of flat crown plates shall be determined in accordnace with Regulation 574.".

Contd.

(b) Parts of flat plates within tube nests:

If stay tubes are used within tubes nests, the thickness of the tube plate shall be calculated in accordance with regulation 574."

11. In the said regulations, in regulation 581, in sub-regulation (b),-

(i) for the last paragraph, the following shall be substituted, namely:-

"Welded attachment of stay tubes be as shown in Figures XII/67, XII/67A, XII/68, XII/68A and XII/69.";

(ii) after figure XII/67, the following figure shall be inserted, namely:-

"(Please insert figure XII/67A here)";

(iii) after figure XII/68, the following figure shall be inserted, namely:-

"(Please insert figure XII/68A here)".

12. In the said regulations

(i) for regulation 590, the following regulation shall be substituted, namely:-

"590. Breathing space.-

Breathing spaces as provided in clause (i), (ii) or (iii) shall be provided depending on the design of the boiler with special attention to the provisions of sub-regulation (ggg) of regulation 546 regarding furnaces.

(i) For boilers as per clause (i) of sub-regulation (ggg) of regulation 546:-

(a) Arrangement of stays: Stays shall be arranged to give sufficient breathing space around the furnace connections and tube nests (see figures XII/75 and XII/77) and shall divide the unstayed areas equally.

(b) Multi-tubular boilers: For both the front and rear attachment of furnaces, the breathing spaces between furnace and tube nests or between furnace and shell shall be a minimum of 50 mm or 5% of the shell inside diameter, whichever is larger, with a maximum requirement of 100 mm.

Clearances between the furnace and wet-back wrapper plates shall not require consideration as breathing spaces.

Contd.

It is recommended that the breathing space below the flue be approximately one-half of the dimensions given in table XII/6A.

(ii) For boilers as per clause (ii) of sub-regulation (ggg) of Regulation 546:-

Stays shall give breathing spaces around the furnace connections and tube nests (see figures XII/70 to XII/77, XII/80, XII/80A, XII/80B, XII/80C and XII/80D) and equally divide the unstayed areas. Breathing spaces between furnaces and tube nests shall be a minimum of 50 mm or 5% of the shell outside diameter, whichever is larger, but need not be more than 100 mm.

Breathing spaces between furnaces and shells shall be as given in Table XII/6B or XII/6C as applicable, but shall be not less than 50 mm or, for bowling hoop furnaces, not less than 75 mm as measured from the outside diameter of the bowling hoop.

For the boilers having more than one furnace, breathing spaces between furnaces shall be not less than 120 mm.

Breathing spaces between gusset or link stays and furnaces shall be not less than 200 mm, except for:

Shell outside diameter or furnace length	>1800 mm) >6000 mm)	..	250 mm.
Shell outside diameter or furnace length	<1400 mm) <3000 mm)	..	150 mm.

Breathing spaces between gusset or link stays and tube nests shall be not less than 100 mm.

When unflanged flat end plates as used, the breathing spaces between gussets or link stays and furnaces shall be increased as follows:

Increase	200 mm	to	220 mm
"	250 "	"	275 "
"	150 "	"	165 "
"	100 "	"	110 "

All other breathing spaces shall be a minimum of 50 mm or 3% of the shell outside diameter whichever is larger but need not be more than 100 mm.

Contd.

Table XII/6D

Breathing Space

Thickness of end plate	Dimension 'L'
mm	mm
< 13	255
⩾ 13 ⩽14	280
> 14 ⩽16	305
>16 ⩽20	330
>20	340

The breathing space below the flues shall be approximately one-half the dimensions given in Table XII/6.

For gusset stays above the tube nests, as fitted in multi-tubular waste heat boilers without internal furnaces, a breathing space of 20.3 mm from the centre line of the adjacent tubes to the toe ofthe gusset angle or plate, may be maintained. For the back end stays below the furnaces of multitubular dryback boilers, a breathing space of 152 mm may be maintained where the flues are constructed in accordance with regulation 546.

Where the flues are constructed of corrugated sections welded together, a breathing space of 114 mm may be maintained.

(ii) After figure XII/8D, the following figures shall be inserted namely:-

(Figures XII/8DA, XII/8DB, XII/8DC and XII/8DD shall be printed here).

13. In the said regulations,-

(i) for regulation 592, the following regulation shall be substituted, namely:-

"592. Furnaces, furnace components, wet back reversal chambers and fire boxes of cylindrical form subject to external pressure.-

Furnaces:

(a) Maximum furnace diameter. The mean diameter of furnaces shall not exceed 1800 mm.

(b) Notations:

b - is the pitch of the furnace corrugations (in mm);

c - is the corrosion allowance = 0.75 mm

Contd.

NOTE 2: When calculating Is, it is only necessary to take into account a corrosion allowance on the furnace gas side.

NOTE 3: Stiffeners complying with figure XII/21 and XII/22 boiler and reversal chamber end plates are considered to be effective points of support.

NOTE 4: The design temperature of the furnace = ds + 4c + 15 saturation temperature plus four times the thickness of the furnace plus 15.

(c) Evaluation of Young's modulus at the design temperature. Value of E shall be obtained from the following table (by linear interpolation if required).

Design temperature in ^0C	Value of E in $kg/cm^2 \times 10^3$
250	1987
300	1947
350	1896
400	1845
450	1814

(d) Plain furnaces: The design pressure of plain furnaces shall be the lower of those obtained using equations XII/25 and XII/25A as follows, but the thickness shall be not less than 7 mm and shall not exceed 22 mm. :-

$$P = \frac{2 E_t (e-C)}{S_1 d} \left[\frac{1 + \frac{d}{15L}}{1 + \frac{0.03\, du}{e-C\left(1 + \frac{d}{0.3L}\right)}} \right]$$

Equation XIII/25

$$P = \frac{1.73 (e-c)^{2.5}}{S_2 L\, d^{1.5}}$$

Equation XII/25(A)

Equation XII/25 and XII/25(A) may be expressed in terms of thickness using equation XII/26 and XII/26(A) respectively as follows and the greater of the thickness obtained shall be used.

Contd.

(g) Tolerances and allowances:

The calculated wall thickness contains a fixed allowance of 0.75 mm for corrosion and wear. For corrugated furnaces, the calculated wall thickness shall be the minimum thickness of the finished furnace. For plain furnaces and reversal chambers, allowance shall be made to take account of any minus tolerances on the plate thickness.

(h) Out-of-roundness:

The percentage out-of-roundness is as follows:-

$$u = \frac{200\ (d_{max} - d_{min})}{d_{max} + d_{min}}$$

This shall be included in the calculation as $u = 1.0$ for corrugated furnaces and $u = 1.5$ for plain furnaces.

(i) Stiffeners.

(i) Stiffeners shall have second moment of area not less than that given by the following equation.

$$Is = \frac{\rho d^3 L}{1.33 \times 10^6}$$

(ii) If the stiffeners are made in sections from bar or plate, the abutting ends shall be prepared so as to ensure that full penetration welds are made.

The thickness of the stiffening ring shall be kept to the minimum required (for limiting dimensions see figures XII/21 and XII/22).

(iii) Bowling hoops are considered as effective points of support. The minimum pitch of bowling hoop centres shall be not less than 500 mm. If bowling hoops are used, the furnace thickness shall be calculated from sub-regulation (d). The dimensions of bowling hoops shall be in accordance with figures XII/95 (a), (b) and (c) and their second moment of area determined from the tables given in these figures, shall be not less than required by sub-regulation (i).

(iv) If corrugated furnaces are equipped with several stiffeners, e.g. one on each corrugation or on each second corrugation, the cross-sectional area and the second moment of area of the stiffeners shall also be taken into consideration when using the equation XII/28. A height of not more than four times the furnace thickness shall be used for the calculation.

Contd.

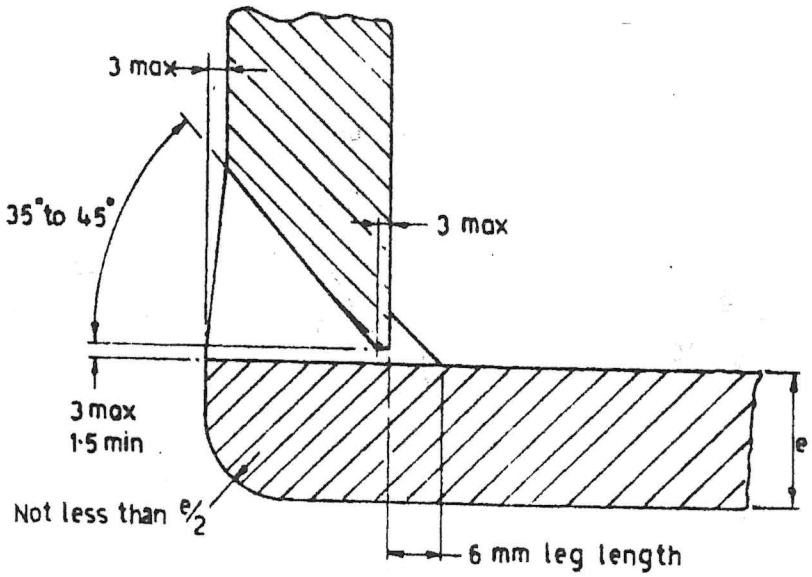

NOTE 1 The plate edge radius of not less than e/2 is only required when furnace end is exposed to a flame or comparably high temperature. e.g. at the entry to the reversal chamber.

2 The front end of the furnace can protrude beyond the weld provided that the protrusion and the weld area are adequately insulated to prevent overheating.

All dimensions are in millimetres.

Attachment of furnace to end plate or reversal chamber.

Fig. XII/16A

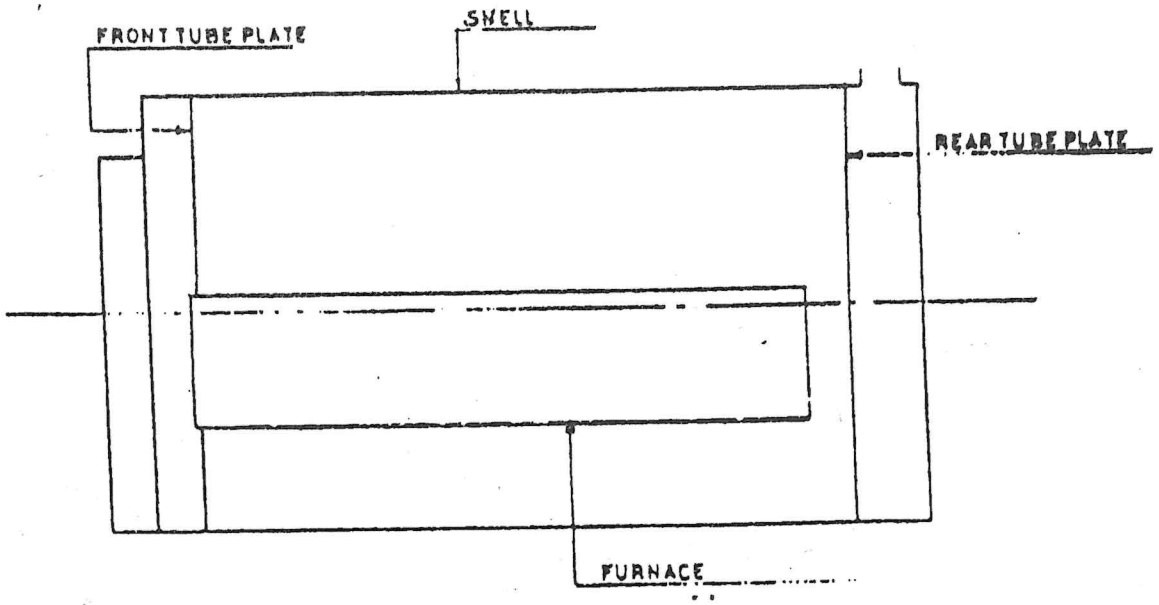

REVERSE FIRED BOILER

Figure XII/20 B

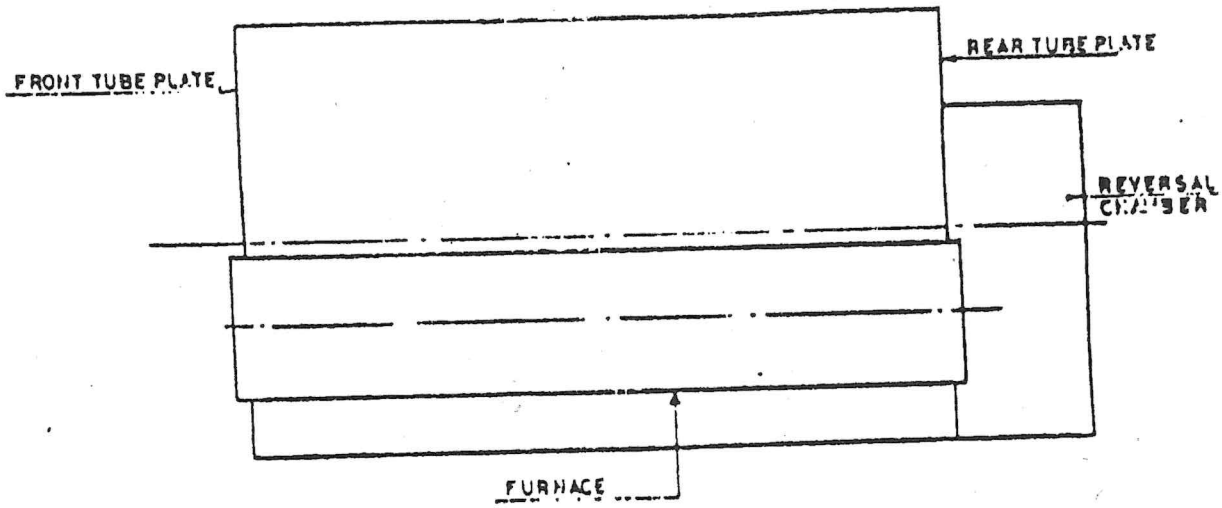

DRY BACK BOILER

Figure XII/20 C

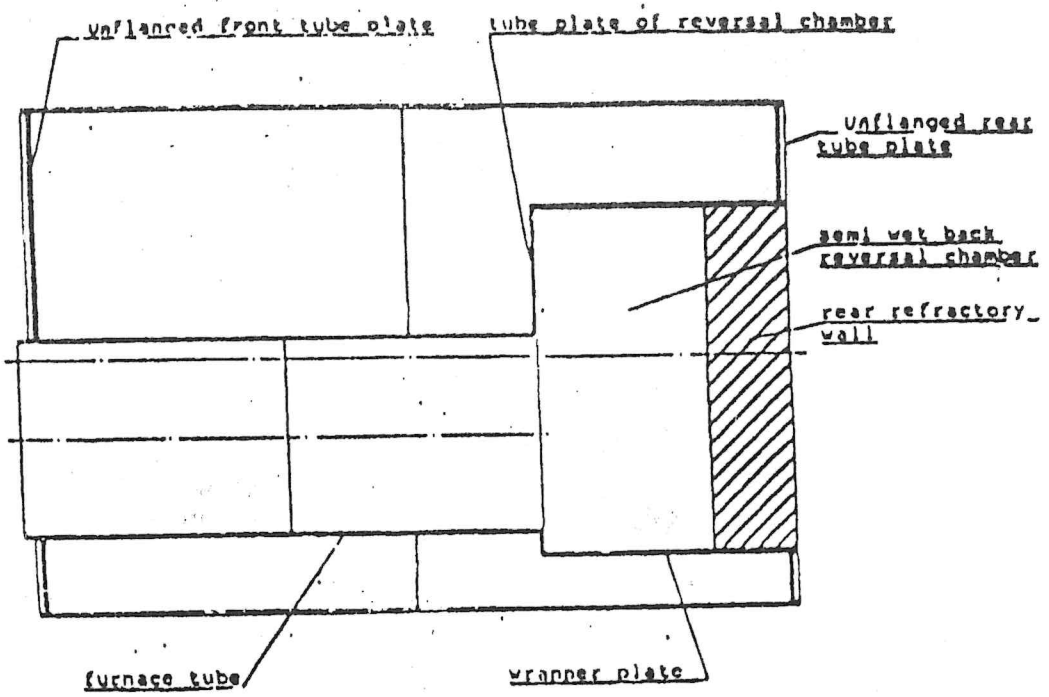

SEMI WET BACK BOILER

Note: Radiant heating surface comprises furnace tube and wrapper plate

Figure XII/20 E

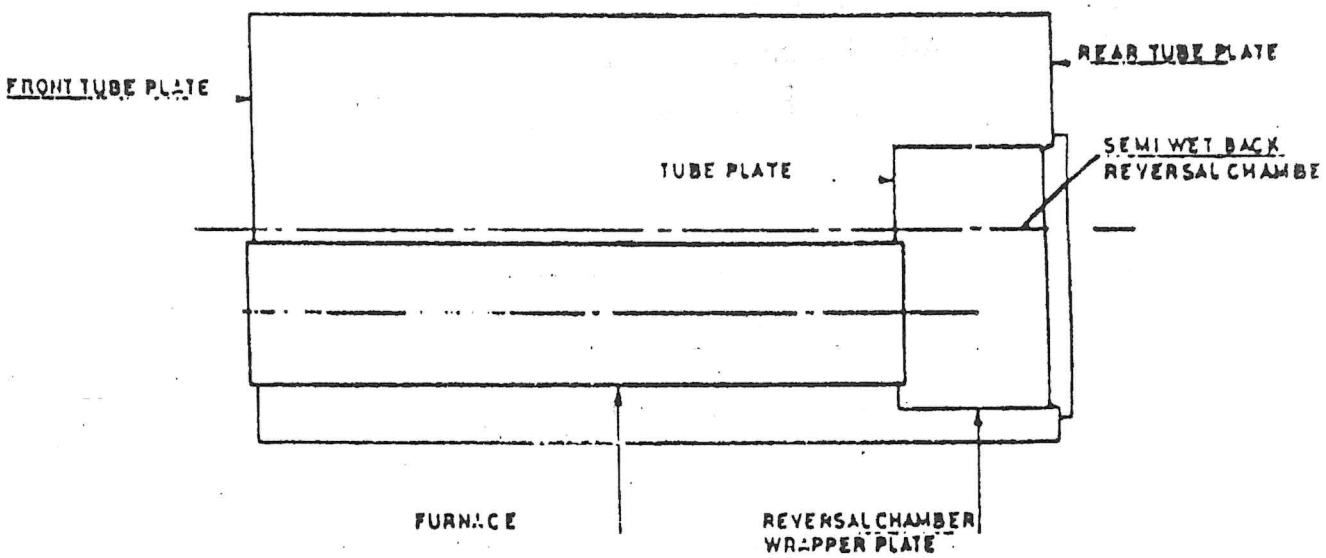

SEMI-WET BACK BOILER

Figure XII/20 F

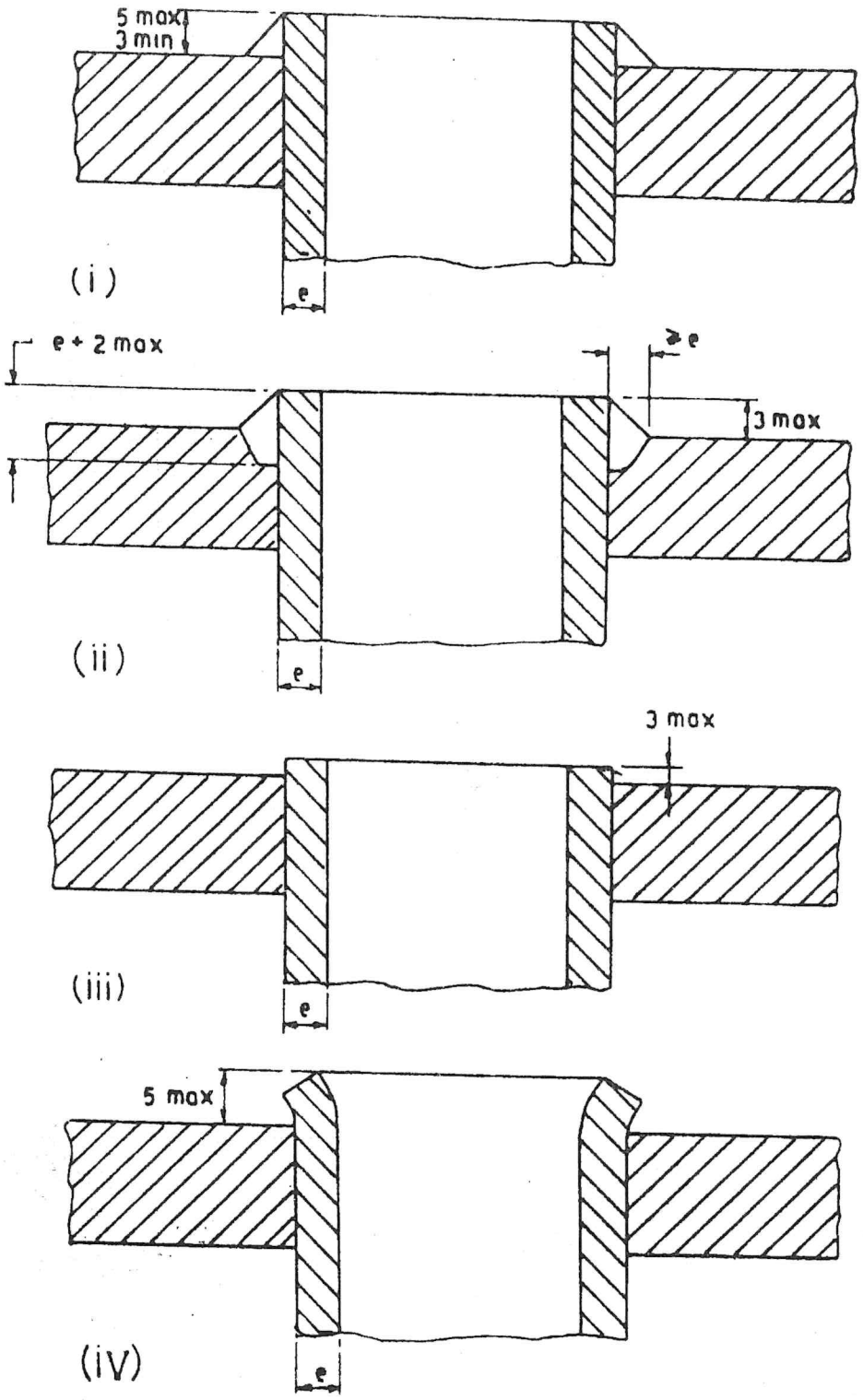

All dimensions are in millimetres.

Fig XIV/67A Typical attachment of plain tubes.

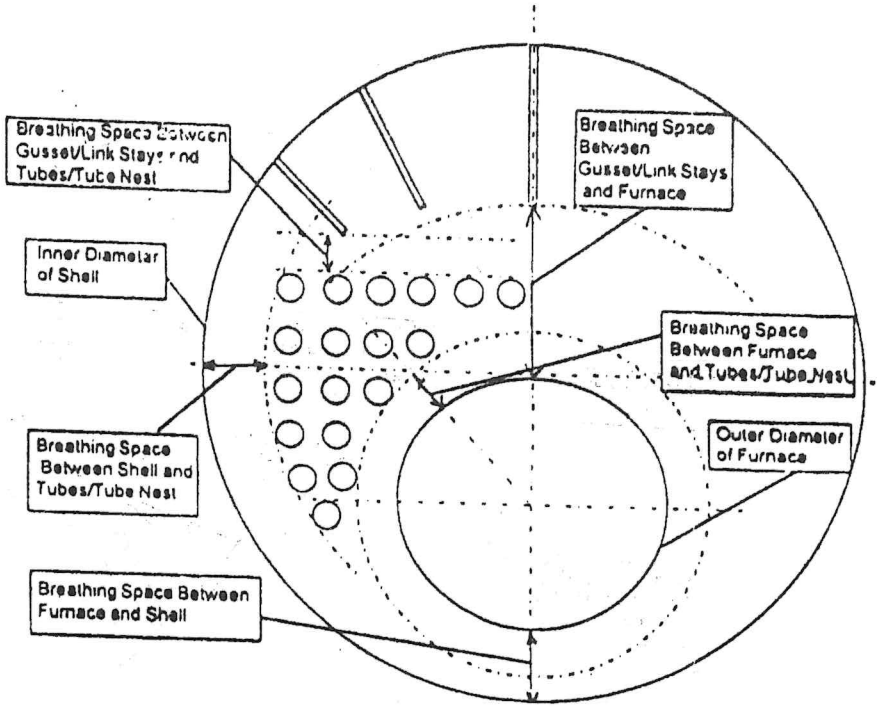

SOME OF THE BREATHING SPACES IN SHELL TYPE BOILERS

Figure XII/80 A

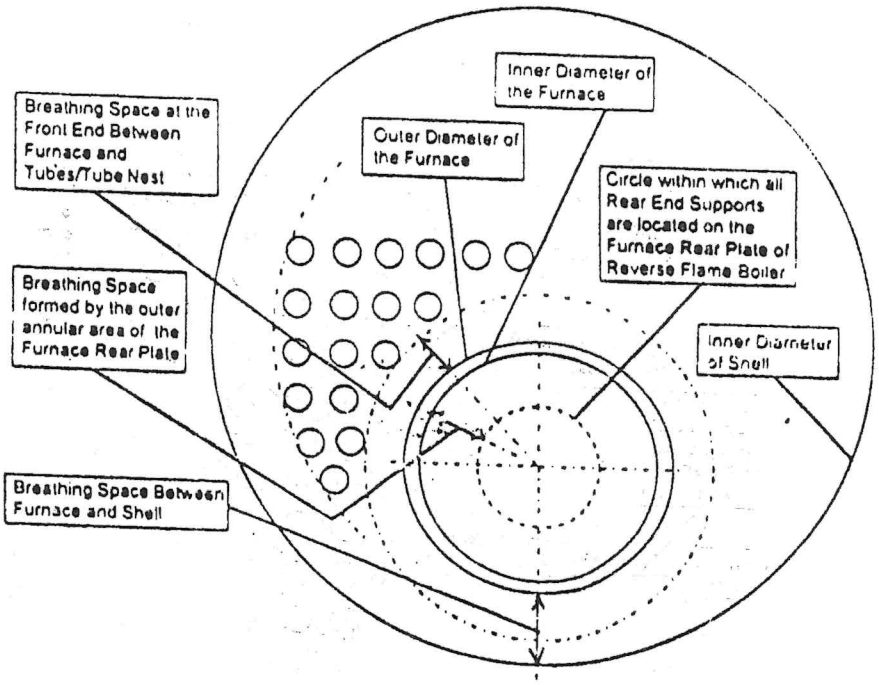

SOME OF THE BREATHING SPACES OF REVERSE FLAME BOILERS

Figure XII/80 B

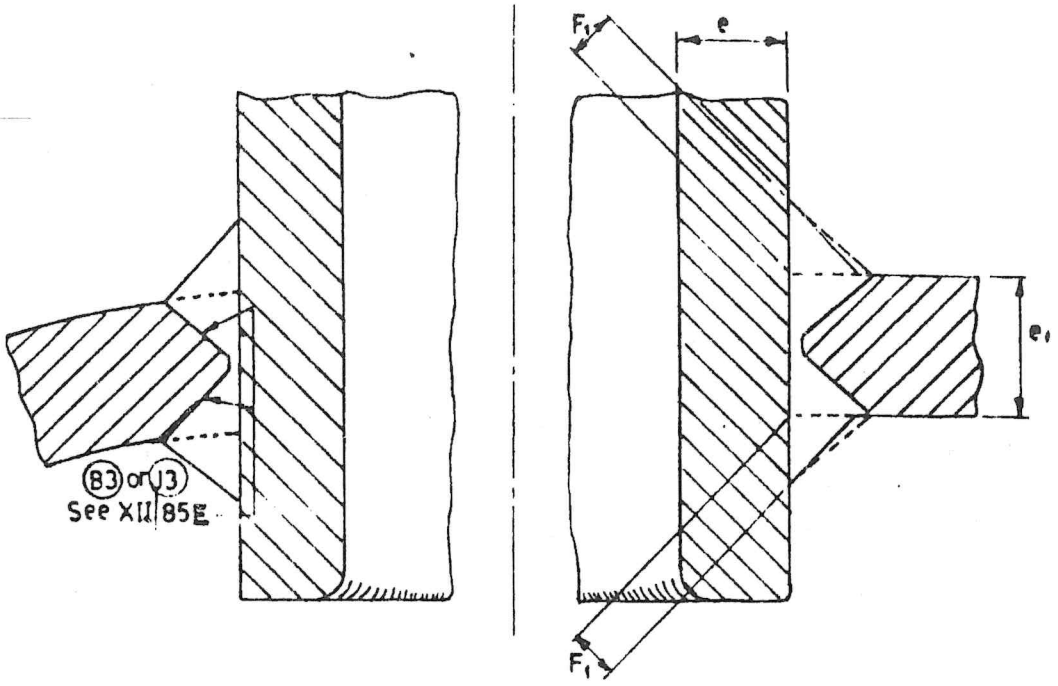

F_1 = e/10 min or 6 mm whichever is larger.

(a)

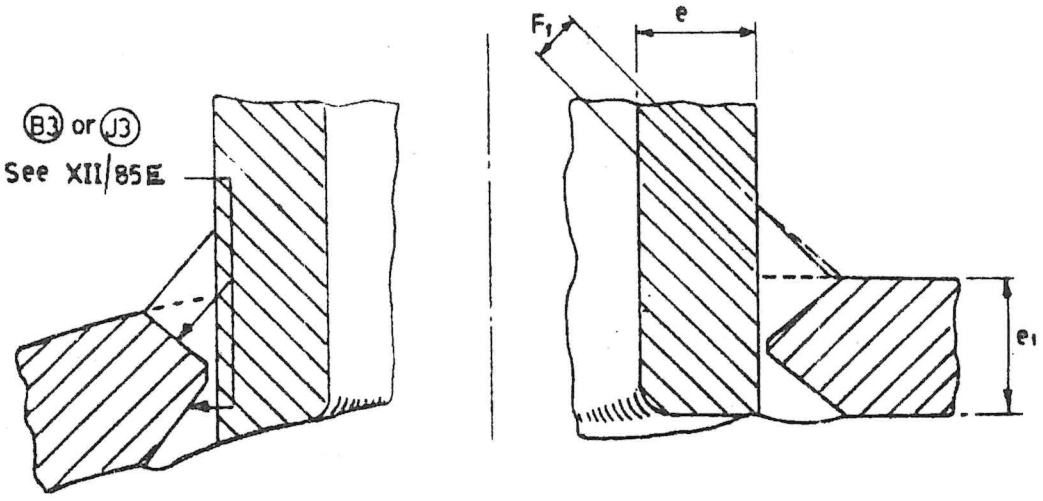

F e 5 min or 6 mm whichever is larger.

(b)

NOTE :-These are generally used when e. is grater than e/2

Fig. XII/85D Set in branches (full penetration weld)

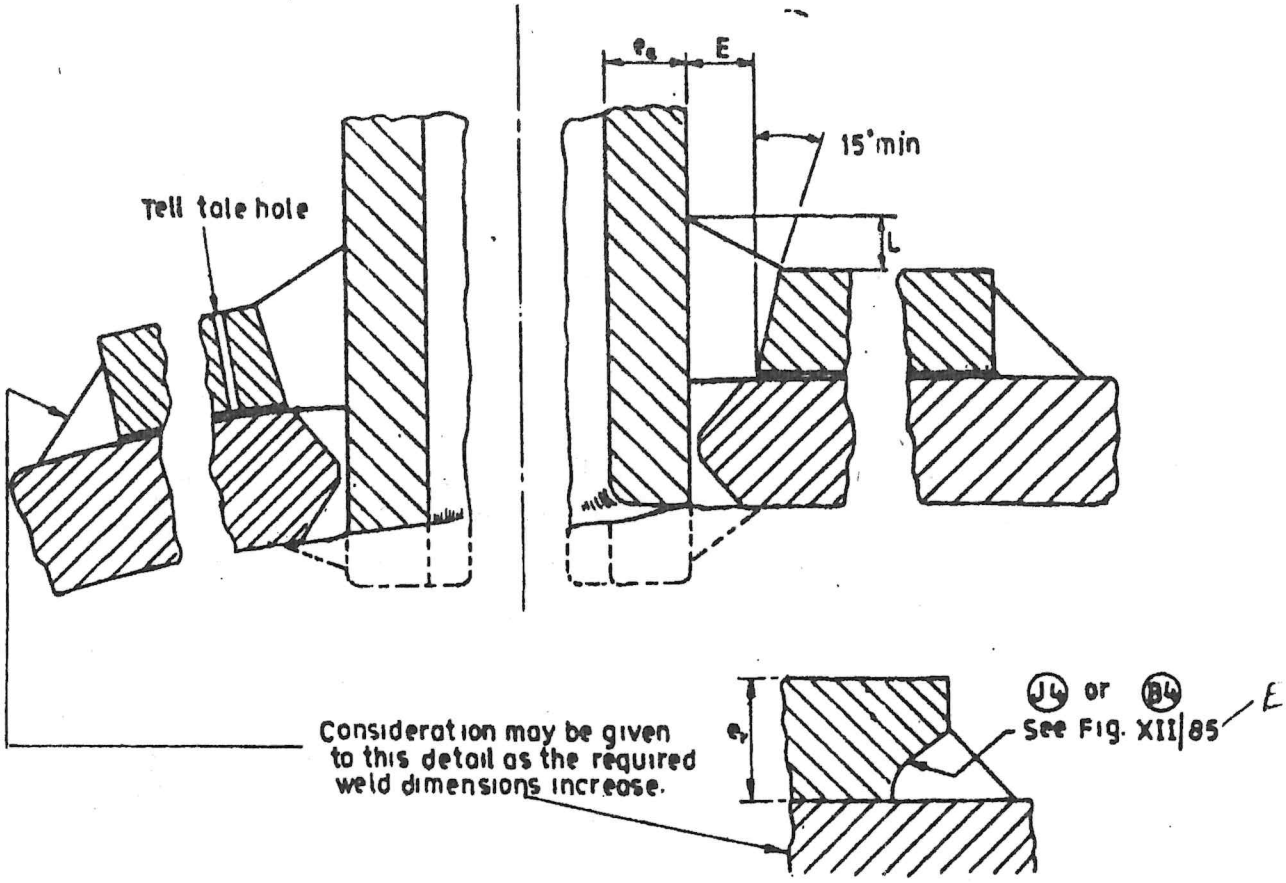

E = 10 min
L = e 3 min but not less than 6
All dimensions are in millimetres.

Fig. XII/85 F Set in branches with added compenstation rings.

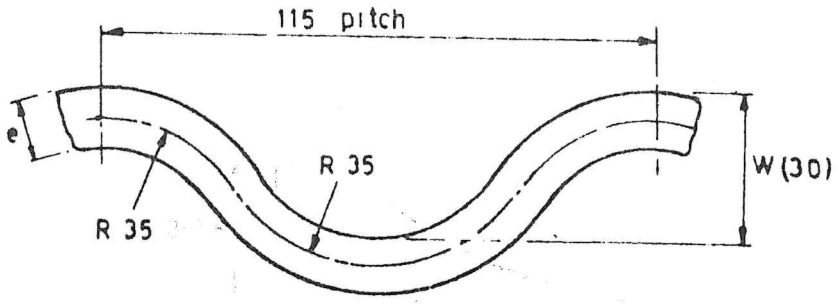

(a) Fox type furnaces (115 corrugation and 30mm depth)

e C	I	F
	$mm^4 \times 10^4$	$mm^2 \times 10^2$
8.25	13.9	11.1
9.25	15.8	12.5
10.25	17.8	13.8
11.25	19.9	15.2
12.25	22.1	16.5
13.25	24.4	17.9

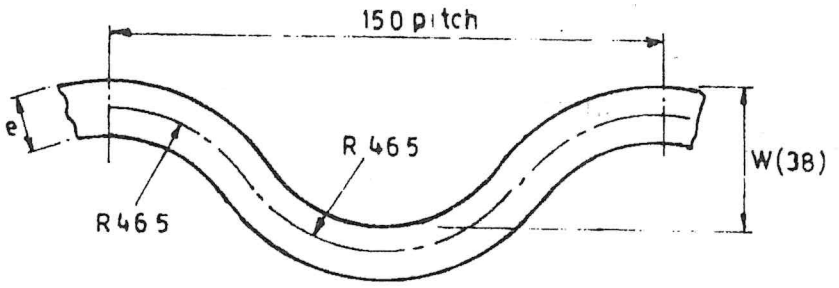

(b) Fox type furnaces (150mm corrugation and 38mm depth)

e C	I	F
	$mm^4 \times 10^4$	$mm^2 \times 10^2$
9.25	31.9	16.1
10.25	35.7	17.9
11.25	39.6	19.6
12.25	43.6	21.4
13.25	47.8	23.1
14.25	52.1	24.9
15.25	56.6	26.6
16.25	61.2	28.4
17.25	66.0	30.1
18.25	71.0	31.8
19.25	76.2	33.6
20.25	81.6	35.3
21.25	87.3	37.1

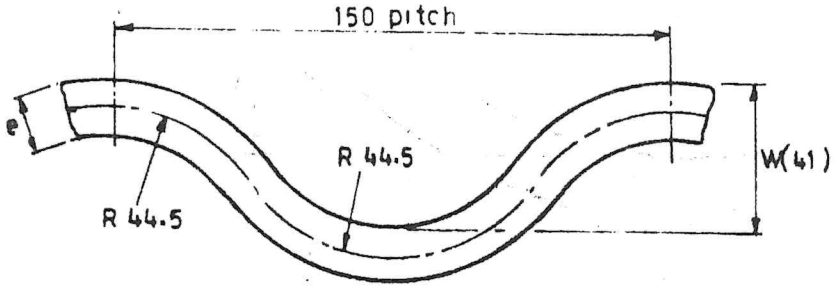

(c) Fox type furnaces (150mm corrugation and 41mm depth)

e C	I	F
	$mm^4 \times 10^4$	$mm^2 \times 10^2$
9.25	37.7	16.5
10.25	42.2	18.3
11.25	46.8	20.1
12.25	51.5	21.9
13.25	56.3	23.6
14.25	61.3	25.4
15.25	66.4	27.2
16.25	71.8	29.0
17.25	77.3	30.8
18.25	83.0	32.6
19.25	88.9	34.3
20.25	95.0	36.1
21.25	101.4	37.9

All dimensions are in millimetres

Fig. XII/94 Second moments of area and cross sectional area F

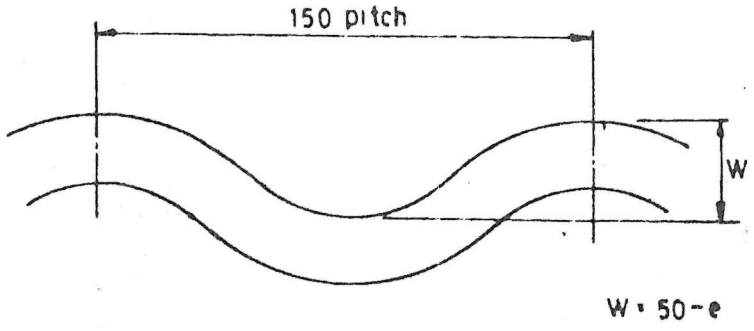

(f) Fox type furnaces (150 mm corrugation and 50 mm depth)

e - C	I	F
	$mm^4 \times 10^4$	$mm^2 \times 10^2$
9·25	35·6	16·4
10·25	37·7	18·0
11·25	39·6	19·6
12·25	41·2	21·2
13·25	42·7	22·8
14·25	44·1	24·4
15·25	45·3	25·9
16·25	46·4	27·4
17·25	47·4	28·9
18.25	48·3	30.4
19·25	49·2	31·9
20·25	50·1	33·3
21·25	51·0	34·8

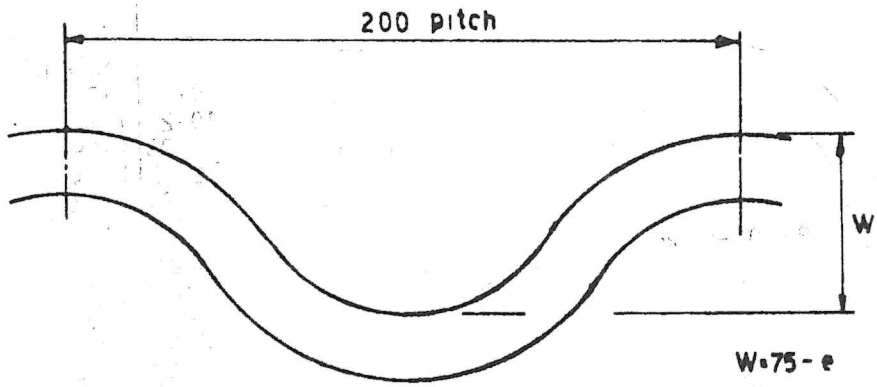

(g) Fox type furnaces (200 mm corrugation and 75 mm depth)

e - C	I	F
	$mm^4 \times 10^4$	$mm^2 \times 10^2$
9.25	129·4	23·3
10.25	138·9	25.7
11.25	147·7	28·0
12·25	155·9	30·4
13·25	163·5	32·6
14.25	170.5	34.9
15·25	177·0	37·1
16·25	183·0	39·4
17·25	188·5	41·5
18·25	193·6	43·7
19·25	198·4	45·8
20·25	202·8	48·0
21·25	206·9	50·0

All dimensions are in millimetres.

Fig. XII/94 (Concluded)

(TO BE PUBLISHED IN THE GAZETTE OF INDIA, PART II SECTION 3(i) AS G.S.R.)

Government of India
Ministry of Industry
(Department of Industrial Development)
Central Boilers Board

***

New Delhi, the 29th April, 1997.

ERRATA

G.S.R..... In the notification of the Government of India in the Ministry of Industry, Department of Industrial Development, Central Boilers Board circulated vide No.6(2)/94-Boilers dated 6th December, 1996,

(i) On page 13, paragraph 13, regulation 592, in paragraph (b) on Notations, for "c" read "C";

(ii) On page 14, against letter symbol Is, for "second moment of inertia", read "second moment of area" ;

(iii) On page 15,

(a) in Note 4, for "ds+4c+15" read "ts+4e+15" ;

(b) for "Equation XIII/25" read "Equation XII/25" ;

(c) in Equation XII/25 (presently written as XIII/25), for "e-C" read "(e-C)"

(d) in equation XII/25(A), in the numerator,

for "$1.73(e-c)^{2.5}$" read "$1.73E(e-C)^{2.5}$"

(iv) On page 17, in the expression for Is, in the denominator, for "$1.33X10^{6}$" read "$1.35X10^{7}$".

(File No.6(2)/94-Boilers)

(V.K. GOEL)
Secretary, Central Boilers Board
Phone : 3013048.

(TO BE PUBLISHED IN THE GAZETTE OF INDIA, PART II, SECTION 3, SUB-SECTION (i)

Government of India
Ministry of Industry
(Department of Industrial Development)
(Central Boilers Board)

...

New Delhi, the 13th December, 1996

NOTIFICATION

G.S.R. - WHEREAS certain draft regulations, further to amend the Indian Boiler Regulations, 1950, were published as required by sub-section (1) of section 31 of the Indian Boilers Act, 1923 (5 of 1923) at pages 1101 to 1107 of the Gazette of India, Part II Section 3, Sub-section (i), dated the 15th June, 1996 under the notification of the Government of India in the Ministry of Industry (Department of Industrial Development)(Central Boilers Board) No. GSR 249, dated the 31st May, 1996 inviting objections and suggestions from all persons likely to be affected thereby till the expiry of a period of forty five days from the date on which copies of the Gazette in which the said notification was published were made available to the public;

AND WHEREAS the said Gazette was made available to the public on the 2nd day of July, 1996;

AND WHEREAS no objections or suggestions have been received;

NOW, THEREFORE, in exercise of the powers conferred by section 28 of the Indian Boilers Act, 1923 (5 of 1923), the Central Boilers Board hereby makes the following regulations further to amend the Indian Boiler Regulations, 1950, namely:-

1. (1) These regulations may be called the Indian Boiler (Second Amendment) Regulations, 1996.

(2) They shall come into force from the date of their publication in the Official Gazette.

2. In the Indian Boiler Regulations, 1950 (hereinafter referred as the said regulations), in regulation 4,

(i) in sub-regulation (c), in clause (iv), for paragraphs 3, the following shall be substituted, namely:-

"Provided further that in respect of the steel made and tested by Well-Known Steel Makers recognised by the Central Boilers Board in the manner laid down in regulations 4A to 4H, a certificate of Well-Known Steel Maker in form IV A shall be accepted in lieu of a certificate from an Inspecting Authority;

Contd.

Pipes

Main dimensions _____

Tolerances _____

Mode of manufacture _____

Identification marks _____

Bend Test _____

Bend test on weld _____

Flare test _____

Flattening test _____

Drift test _____

Tensile strength _____

Crushing test _____

Heat treatment _____

Flange test _____

Final hydraulic test _____

Non-destructive examination _____

Certified that the particulars entered herein are correct.

The part has been manufactured to comply with the Indian Boiler Regulations at our Works above named and satisfactorily withstood a water test of .....on the .....day of ..... 19 ..... in the presence of our responsible representative whose signature is appended hereunder.

Maker's Representative.
(Name and signature)

Maker_ _ _ _ _

Note:-In the case of pipes made from steel, made and certified by well-known Steel Makers in India or other countries, particulars regarding the 'material' as certified by them (in any form) shall be noted in the appropriate columns or paragraphs in this certificate.

FORM III E

(Certificate of manufacture and test)
(Regulation 4(f))

Maker's Name _____

Code of Manufacture/Specifications _____

Contd.

"FORM IV A"

CERTIFICATE OF MANUFACTURE AND RESULTS OF TESTS IN LIEU OF FORM IV

◊ Regulation 4(c) (iv) ◊

It is hereby certified that original steel Maker's certificates in Form IV contain following information in respect of the material used in the manufacture of a boiler or parts thereof bearing makers Number: Sample and according to Drawing Number:

Part of BOILER	QUANTITY	Cast/Heat No PLATE No.	STEEL MAKING PROCESS	SPECIFICATION	DEOXIDATION

NAME OF STEEL MAKER/PART MAKER	TEST PIECE NO.	CERTIFICATE NO. & DATE	LENGTH BREADTH/ O.D.THICKNESS	HEAT TREATMENT

% CHEMICAL ANALYSIS C Mn P S Si other alloying elements	T.S. (kg/mm²)	U.T.S. (kg/mm²)	Elongation %.L.	BEND TEST REMARKS (.)

OFFICIAL SEAL

INSPECTING AUTHORITY

(V.K. Goel)
Secretary, Central Boilers Board

(File No.6(5)/95-Boilers)

Footnote:-The principal regulations were published in the Gazette of India as S.R.O. No.600 dated 15th September, 1950 and last amended vide Gazette notifications numbers-

Contd.

(TO BE PUBLISHED IN THE GAZETTE OF INDIA, PART II SECTION 3(i) AS G.S.R.)

Government of India
Ministry of Industry
(Department of Industrial Development)
Central Boilers Board.

...

New Delhi, the 13th February, 1997

NOTIFICATION

G.S.R. WHEREAS certain draft regulations, further to amend the Indian Boiler Regulations, 1950, were published, as required by sub-section (1) of section 31 of the Indian Boilers Act, 1923 (5 of 1923) at pages 883-884 of the Gazette of India, Part II, Section 3, Sub-Section (i), dated the 4th May, 1996 under the notification of the Government of India in the Ministry of Industry (Department of Industrial Development)(Central Boilers Board) number GSR 194 dated the 24th April, 1996, inviting objections and suggestions from all persons likely to be affected thereby till the expiry of a period of forty-five days from the date on which copies of the Gazette in which the said notification was published were made available to the public;

AND WHEREAS the copies of the said Gazette were made available to the public on the 23rd May, 1996;

AND WHEREAS objections and suggestions received from the public were considered by the Central Boilers Board.

NOW, THEREFORE, in exercise of the powers conferred by section 28 of the Indian Boilers Act, 1923 (5 of 1923), the Central Boilers Board hereby makes the following regulations further to amend the Indian Boiler Regulations, 1950, namely:-

1. (1) These regulations may be called the Indian Boiler (Amendment) Regulations, 1997.

(2) They shall come into force on the date of their publication in the Official Gazette.

2. In the Indian Boiler Regulations, 1950, in regulation 393, for sub-regulation (b), the following sub-regulation shall be substituted, namely:-

"(b) In the case of boilers made outside India for use in the State, the manufacturing drawings and particulars of the material, design and construction, of boilers shall be submitted initially to the Inspecting Authority in the country of manufacture for examination and approval.

The manufacturing drawings and the particulars of materials, design and construction in the case of fired boilers of steam generating capacity 100 Tons/hour and above and that of Waste heat boiler of 20 Tons/hour and

Contd.

(TO BE PUBLISHED IN THE GAZETTE OF INDIA, PART II SECTION 3(i) AS G.S.R.)

Government of India
Ministry of Industry
(Department of Industrial Development)
Central Boilers Board

...

New Delhi, the 19th March, 1997

NOTIFICATION

G.A.R. WHEREAS certain draft regulations, further to amend the Indian Boiler Regulations, 1950, were published as required by sub-section (1) of section 31 of the Indian Boilers Act, 1923 (5 of 1923) at pages 525 to 529 of the Gazette of India, Part-II, Section 3, Sub-section (i), dated the 24th February, 1996 under the notification of the Government of India in the Ministry of Industry (Department of Industrial Development)(Central Boilers Board number GSR 96 dated 9th February, 1996 inviting objections and suggestions from all persons likely to be affected thereby till the expiry of a period of forty-five days from the date on which copies of the Gazette in which the said notification was published were made available to the public;

AND WHEREAS the said Gazette was made available to the public on the 27th February, 1996;

AND WHEREAS the objections and suggestions received have been considered by the Central Boilers Board;

NOW, THEREFORE, in exercise of the powers conferred by section 28 of the Indian Boilers Act, 1923 (5 of 1923), the Central Boilers Board hereby makes the following regulations further to amend the Indian Boiler Regulations, 1950, namely:-

1. (1) These regulations may be called the Indian Boiler (Second Amendment) Regulations, 1997.

(2) They shall come into force on the date of their publication in the Official Gazette.

2. In the Indian Boiler Regulations, 1950 (hereinafter referred as the said regulations), in regulation 3, in sub-regulation (2), in paragraph (i), the following shall be added, at the end, namely:-

"and that the methods of manufacture, fabrication and heat treatment conform to the specified Codes or Standards.".

3. In the said regulations, in regulation 348, for sub-regulations (b), (c) and (d) the following sub-regulations shall be substituted, namely:-

Contd.

5. In the said regulations, in regulation 561, in sub-regulation (b), -

(i) for clause (ii), the following shall be substituted, namely:-

"(ii) Tensile tests:-

(a) (i) Welded joint - The dimensions of the reduced tensile section shall be as shown in figure 60-1(a). The width of the reduced section shall be at least 25 millimetres.

(ii) If the thickness of the plate does not exceed 30 millimetres, the thickness of the specimen shall be equal to the plate thickness and the plate surface of the specimen shall be machined to take away the surface irregularities of the plate and the weld.

(iii) If the plate thickness exceeds 30 millimetres, the tensile test shall be carried out on several reduced section specimens, each having a thickness of at least 30 millimetres and width at the effective cross-section of at least 25 millimetres. These specimens shall be taken out of the test piece in such a way that the tensile test covers the whole thickness of the weld joints as shown in figure 60-1(b). The tensile strength shall not be less than the lower limit specified for the plate.

(b) All weld metal - The dimensions of the all weld metal tensile test specimen shall be those given in figure 63. The diameter shall be the maximum possible consistent with the cross section of the weld but in no case more than 20 millimetres, the gauge length shall be equal to five times the diameter. The tensile strength shall not be less than the lower limit specified for the plate. The elongation shall not be less than 20 per cent on a gauge length of four times the square root of the cross-sectional area of the specimen and the reduction in area not less than 35 per cent.";

(ii) for clause (v), the following clause shall be substituted, namely:-

"(v) Macro and Micro examination - A specimen of the full thickness of the plate and not less than 13 millimetres wide shall be provided from each set of test plates for the purpose of macro and micro examinations.

Microetching of a complete cross-section of the weld including the heat affected zone, should show satisfactory penetration, fusion and absence of significant inclusions or other defects.

Should there be any doubt as to the condition of the weld as shown by macro-etching, the area concerned is to be microscopically examined for defect investigation.";

Contd.

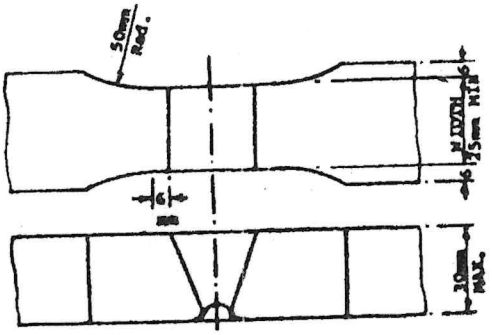

Specimen 1a
Reduced Section Tensile Specimen

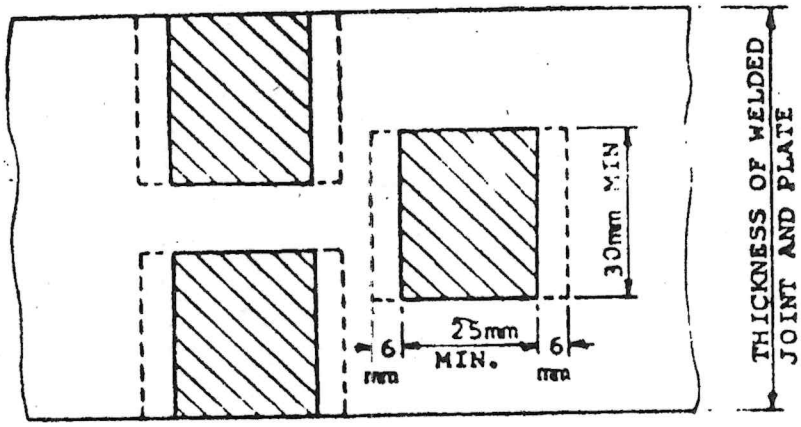

Specimen 1b
Reduced Section Tensile Specimen in a thick plate

Figure XII/60

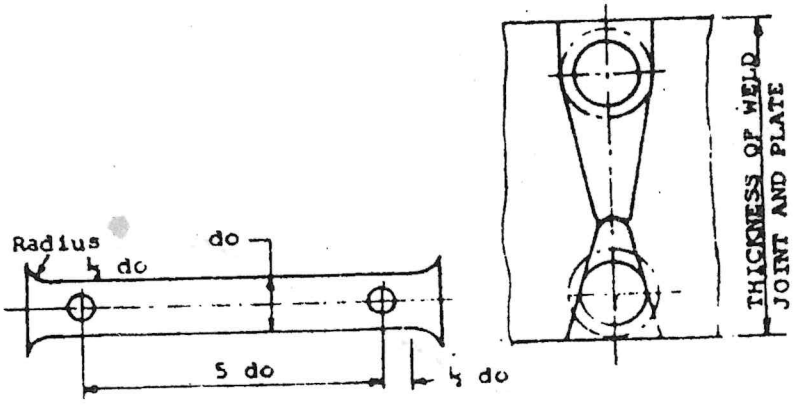

Tensile Test all weld metal

Figure XII/63

No.6(6)/95-Boilers New Delhi, the 19th March, 1997.

Copy forwarded for information to:-

1. All State Govts. (Deptt. dealing with the subject)-
2. All the members of the Central Boilers Board - as per list.
3. All the Chief Inspector of Boilers of all the State and Union Territories - as per list.
4. All Inspecting Authorities - as per list.
5. The Secretary to the Govt. of Jammu and Kashmir, Works and Powers Deptt., Srinagar.
6. The Chief Engineer (Mechanical and Stores Deptt.) and Chief Inspector of Boilers, Govt. of Jammu and Kashmir, Jammu.
7. The Director General, Indian Standards Institution, Manak Bhavan, New Delhi (with 4 spare copies).
8. Ministry of Law and Justice and C.A. (Hindi Translation Section) New Delhi (with 4 spare copies).
9. Ministry of Law and Justice and C.A. (Legislative Deptt, Legislation III Section, New Delhi (with 4 spare copies).
10. Rajya Sabha Secretariat, Parliament House, New Delhi. (with 4 spare copies).
11. Lok Sabha Secretariat, Committee Branch II, New Delhi (with 4 spare copies).
12. The Librarian, Ministry of Industry, Udyog Bhavan, New Delhi (with 4 spare copies).
13. Guard File.

The above notification is being published in the Gazette of India, Part II Section 3(i) as G.S.R., a copy of which will be available on sale with the Manager of Publications, Government of India, Publication Branch, Civil Lines, Delhi-8.

(M.L. AHUJA)
Deputy Director (Technical)
Phone : 3010221/2242.

(TO BE PUBLISHED IN THE GAZETTE OF INDIA, PART II SECTION 3(i) AS G.S.R.)

Government of India
Ministry of Industry
(Department of Industrial Development)
Central Boilers Board.

...

New Delhi, the 13th February, 1997

NOTIFICATION

G.S.R. WHEREAS certain draft regulations, further to amend the Indian Boiler Regulations, 1950, were published, as required by sub-section (1) of section 31 of the Indian Boilers Act, 1923 (5 of 1923) at pages 883-884 of the Gazette of India, Part II, Section 3, Sub-Section (i), dated the 4th May, 1996 under the notification of the Government of India in the Ministry of Industry (Department of Industrial Development)(Central Boilers Board) number GSR 194 dated the 24th April, 1996, inviting objections and suggestions from all persons likely to be affected thereby till the expiry of a period of forty-five days from the date on which copies of the Gazette in which the said notification was published were made available to the public;

AND WHEREAS the copies of the said Gazette were made available to the public on the 23rd May, 1996;

AND WHEREAS objections and suggestions received from the public were considered by the Central Boilers Board.

NOW, THEREFORE, in exercise of the powers conferred by section 28 of the Indian Boilers Act, 1923 (5 of 1923), the Central Boilers Board hereby makes the following regulations further to amend the Indian Boiler Regulations, 1950, namely:-

1. (1) These regulations may be called the Indian Boiler (Amendment) Regulations, 1997.

(2) They shall come into force on the date of their publication in the Official Gazette.

2. In the Indian Boiler Regulations, 1950, in regulation 393, for sub-regulation (b), the following sub-regulation shall be substituted, namely:-

"(b) In the case of boilers made outside India for use in the State, the manufacturing drawings and particulars of the material, design and construction, of boilers shall be submitted initially to the Inspecting Authority in the country of manufacture for examination and approval.

The manufacturing drawings and the particulars of materials, design and construction in the case of fired boilers of steam generating capacity 100 Tons/hour and above and that of Waste heat boiler of 20 Tons/hour and

Contd.

above shall then be submitted to the Technical Adviser (Boilers) for selection of latest materials with high strengths and use in high temperature and pressure, energy conservation and increased thermal efficiency and remote control and instrumentation for the safety of the Boilers. Thereafter, the manufacturing drawings and the particulars of materials, design and construction shall be sent to the Chief Inspector of Boilers of the State where the boiler will be installed and used for examination and approval before commencement of manufacture so as to avaoid questions arising at the time of erection and registration of the boile.

(File No.6(3)/96-[illegible])

(V.K. GOEL) 18/2/97
Secretary, Central Boilers Board.
Phone : 3013048.

Footnote:- The principal regulations were published in the Gazette of India as S.R.O. No.600 dated 15th September, 1950 and last amended vide Gazette notifications -

(i) GSR 173 dated 24th March, 1990
(ii) GSR 175 dated 24th March, 1990
(iii) GSR 488 dated 9th October, 1993
(iv) GSR 516 dated 23rd October, 1993
(v) GSR 634 dated 25th December, 1993
(vi) GSR 107 dated 26th February, 1994
(Corrigendum GSR 223 dated 14th May, 1994)
(vii) GSR 250 dated 4th June, 1994
(viii) GSR 402 dated 12th August, 1994
(ix) GSR 427 dated 20th August, 1994
(x) GSR 562 dated 12th November, 1994
(xi) GSR 607 dated 10th December, 1994
(xii) GSR 83 dated 25th February, 1995
(xiii) GSR 93 dated 4th March, 1995
(xiv) GSR 488 dated 9th November, 1996
(xv) GSR 582 dated 28th December, 1996
(xvi) GSR 59 dated 25th January, 1997

To

The General Manager,
Government of India Press,
Mayapuri, Ring Road,
NEW DELHI-110064.

(TO BE PUBLISHED IN THE GAZETTE OF INDIA, PART II SECTION 3(i) AS G.S.R.)

Government of India
Ministry of Industry
(Department of Industrial Development)
Central Boilers Board

...

New Delhi, the 19th March, 1997

NOTIFICATION

G.A.R. WHEREAS certain draft regulations, further to amend the Indian Boiler Regulations, 1950, were published as required by sub-section (1) of section 31 of the Indian Boilers Act, 1923 (5 of 1923) at pages 525 to 529 of the Gazette of India, Part-II, Section 3, Sub-section (i), dated the 24th February, 1996 under the notification of the Government of India in the Ministry of Industry (Department of Industrial Development)(Central Boilers Board number GSR 96 dated 9th February, 1996 inviting objections and suggestions from all persons likely to be affected thereby till the expiry of a period of forty-five days from the date on which copies of the Gazette in which the said notification was published were made available to the public;

AND WHEREAS the said Gazette was made available to the public on the 27th February, 1996;

AND WHEREAS the objections and suggestions received have been considered by the Central Boilers Board;

NOW, THEREFORE, in exercise of the powers conferred by section 28 of the Indian Boilers Act, 1923 (5 of 1923), the Central Boilers Board hereby makes the following regulations further to amend the Indian Boiler Regulations, 1950, namely:-

1. (1) These regulations may be called the Indian Boiler (Second Amendment) Regulations, 1997.

(2) They shall come into force on the date of their publication in the Official Gazette.

2. In the Indian Boiler Regulations, 1950 (hereinafter referred as the said regulations), in regulation 3, in sub-regulation (2), in paragraph (i), the following shall be added, at the end, namely:-

"and that the methods of manufacture, fabrication and heat treatment conform to the specified Codes or Standards.".

3. In the said regulations, in regulation 348, for sub-regulations (b), (c) and (d) the following sub-regulations shall be substituted, namely:-

Contd.

"(a) (i) The cold drawn seamless carbon steel pipes and welded carbon steel pipes shall be supplied in normalised condition.

(ii) Hot finished seamless carbon steel pipes shall be supplied in hot finished condition or in normalised condition at the option of the manufacturer.

(iii) The seamless alloy steel pipe either cold finished or hot finished and welded pipes shall be supplied in normalised and tempered condition.

(iv) By agreement between the users and the manufacturer, the pipes may be delivered in a condition other than normalised and tempered condition in which case they shall be suitable for subsequent manipulation and the user shall be informed of the heat-treatment necessary to give required properties.

(b) (i) Pipe bending and forming (viz. reducing/swaging) operation shall be done by any hot or cold method and to any radius which shall result in a surface free from cracks, buckles or other defects as determined by the method of inspection specified in the design. A post bending or post forming heat-treatment for carbon steel material is required with a nominal wall thickness in excess of 19.0 millimetres unless the bending or forming operation are performed and completed at normalizing temperatures, where no further heat treatment is required. The heat treatment where required shall be normalized or stress-relieved, as the case may be.

(ii) A post bending or post forming heat treatment shall be required for all ferritic alloy steel material with nominal pipe size 100.00 millimetres and larger or with a nominal thickness 13.0 millimetres or greater.

(iii) If hot bending or forming is performed, the material shall receive normalize and temper or tempering heat-treatment as required by the design. For cold operation, tempering heat-treatment shall be applied.

(c) Marking : Marking shall be carried out in accordance with regulation 395F."

4. In the said regulations, in regulation 374, for sub-regulation (f), the following sub-regulation shall be substituted, namely:-

"(f) Hydraulic testing of fabricated pipes having attachments of flanges, fittings, butt joints, branch joints and weldolets shall be done at manufacturer's works or alternatively at site at 1.5 times the design pressure. Where hydraulic testing of fabricated pipe joints is not carried out at manufacturer's works, dye-penetrant test shall be carried out on the welded joints alongwith five percent radiography of such joints."

Contd.

5. In the said regulations, in regulation 561, in sub-regulation (b), -

(i) for clause (ii), the following shall be substituted, namely:-

"(ii) Tensile tests:-

(a) (i) Welded joint - The dimensions of the reduced tensile section shall be as shown in figure 60-1(a). The width of the reduced section shall be at least 25 millimetres.

(ii) If the thickness of the plate does not exceed 30 millimetres, the thickness of the specimen shall be equal to the plate thickness and the plate surface of the specimen shall be machined to take away the surface irregularities of the plate and the weld.

(iii) If the plate thickness exceeds 30 millimetres, the tensile test shall be carried out on several reduced section specimens, each having a thickness of at least 30 millimetres and width at the effective cross-section of at least 25 millimetres. These specimens shall be taken out of the test piece in such a way that the tensile test covers the whole thickness of the weld joints as shown in figure 60-1(b). The tensile strength shall not be less than the lower limit specified for the plate.

(b) All weld metal - The dimensions of the all weld metal tensile test specimen shall be those given in figure 63. The diameter shall be the maximum possible consistent with the cross section of the weld but in no case more than 20 millimetres, the gauge length shall be equal to five times the diameter. The tensile strength shall not be less than the lower limit specified for the plate. The elongation shall not be less than 20 per cent on a gauge length of four times the square root of the cross-sectional area of the specimen and the reduction in area not less than 35 per cent.";

(ii) for clause (v), the following clause shall be substituted, namely:-

"(v) Macro and Micro examination - A specimen of the full thickness of the plate and not less than 13 millimetres wide shall be provided from each set of test plates for the purpose of macro and micro examinations.

Microetching of a complete cross-section of the weld including the heat affected zone, should show satisfactory penetration, fusion and absence of significant inclusions or other defects.

Should there be any doubt as to the condition of the weld as shown by macro-etching, the area concerned is to be microscopically examined for defect investigation.";

Contd.

(iii) for figure XII/60, the following figure shall be substituted, namely:-

(Please print the attached figure No. XII/60 here)

(iv) For figure XII/63, the following figure shall be substituted, namely:-

(Please print the attached figure No. XII/63 here)

6. In the said regulations, for regulation 601, the following shall be substituted, namely:-

"601. Hydraulic and Hammer Tests -

(a) (i) Class I Boilers - Each Class I Boiler shall, on completion of all welding and/or repairs and after heat-treatment, be subjected to a hydraulic test of 1.5 times the design pressure without any indication of weakness or defect.

(ii) Class II and Class III Boilers - Each Class II and Class III Boilers shall be tested to a pressure twice the design pressure.

(b) (i) the Test shall be witnessed by the Inspecting Authority or Inspecting Officer.

(ii) The test pressure shall be maintained for a period not less than 30 minutes.

It is important in the interest of safety that the boiler be properly vented, so as to prevent the formation of air pockets, before the test pressure as applied.

Note -

1. It is recommended that the temparature of the water should not be less than 7°C during the hydraulic test.

2. It is further recommended that before the boiler is approached for close examination, the pressure shall be reduced to not less than 1.1 times the design pressure and not more than 0.9 times the hydraulic test pressure.

3. On completion of hydraulic test, release of pressure shall be gradual.

Contd.

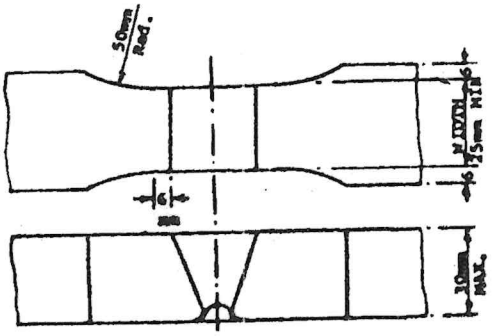

Specimen 1a
Reduced Section Tensile Specimen

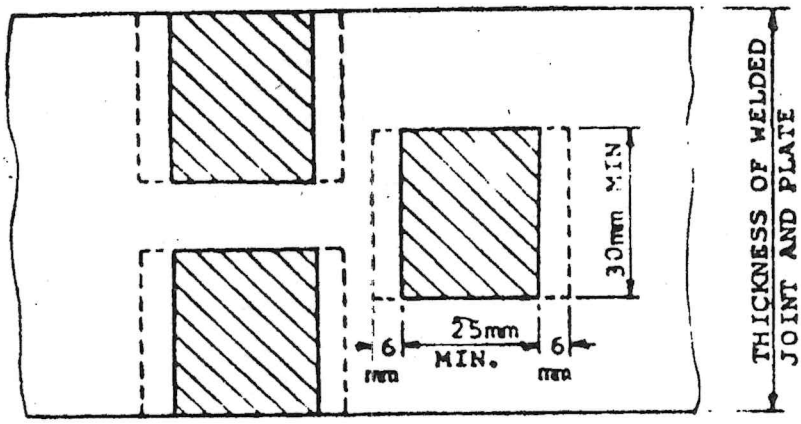

Specimen 1b
Reduced Section Tensile Specimen in a thick plate

Figure XII/60

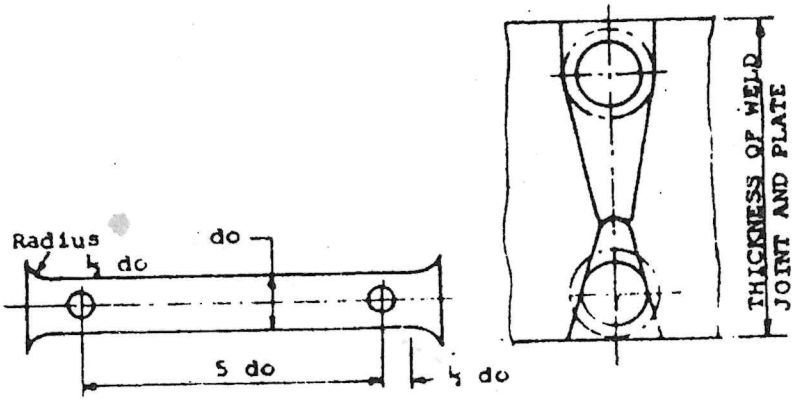

Tensile Test all weld metal

Figure XII/63

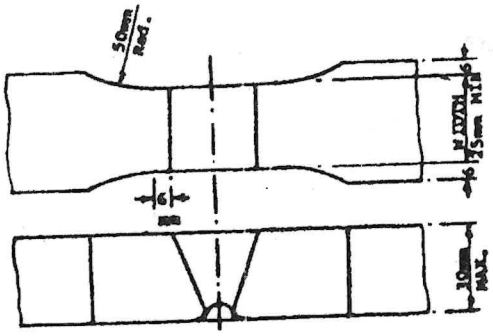

Specimen 1a
Reduced Section Tensile Specimen

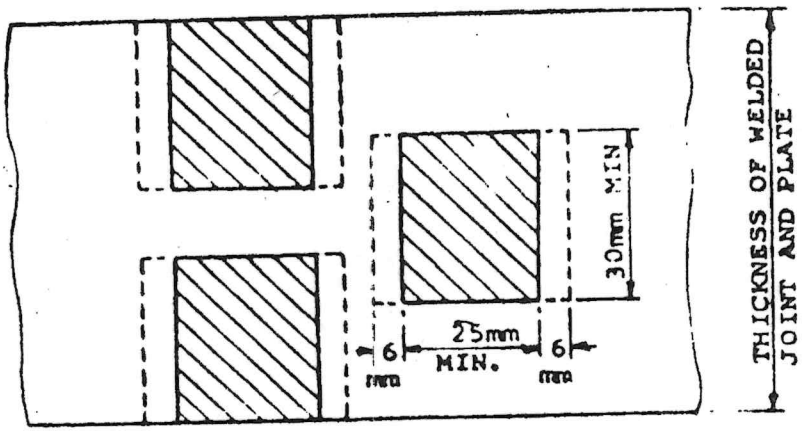

Specimen 1b
Reduced Section Tensile Specimen in a thick plate

Figure XII/60

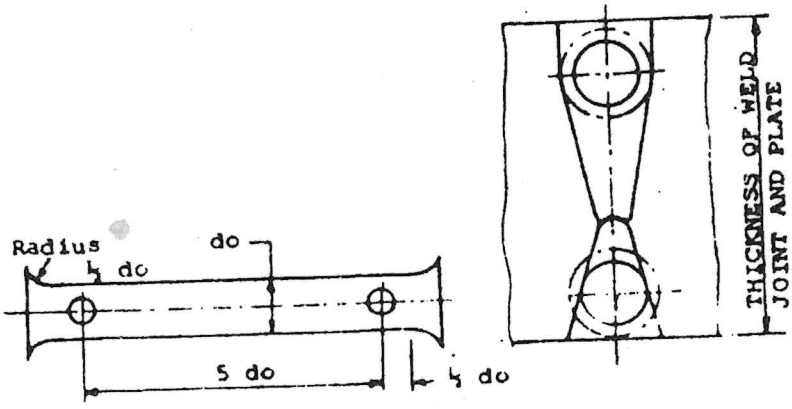

Tensile Test all weld metal

Figure XII/63

No.6(6)/95-Boilers New Delhi, the 19th March, 1997.

Copy forwarded for information to:-

1. All State Govts. (Deptt. dealing with the subject)-
2. All the members of the Central Boilers Board - as per list.
3. All the Chief Inspector of Boilers of all the State and Union Territories - as per list.
4. All Inspecting Authorities - as per list.
5. The Secretary to the Govt. of Jammu and Kashmir, Works and Powers Deptt., Srinagar.
6. The Chief Engineer (Mechanical and Stores Deptt.) and Chief Inspector of Boilers, Govt. of Jammu and Kashmir, Jammu.
7. The Director General, Indian Standards Institution, Manak Bhavan, New Delhi (with 4 spare copies).
8. Ministry of Law and Justice and C.A. (Hindi Translation Section) New Delhi (with 4 spare copies).
9. Ministry of Law and Justice and C.A. (Legislative Deptt, Legislation III Section, New Delhi (with 4 spare copies).
10. Rajya Sabha Secretariat, Parliament House, New Delhi. (with 4 spare copies).
11. Lok Sabha Secretariat, Committee Branch II, New Delhi (with 4 spare copies).
12. The Librarian, Ministry of Industry, Udyog Bhavan, New Delhi (with 4 spare copies).
13. Guard File.

The above notification is being published in the Gazette of India, Part II Section 3(i) as G.S.R., a copy of which will be available on sale with the Manager of Publications, Government of India, Publication Branch, Civil Lines, Delhi-8.

(M.L. AHUJA)
Deputy Director (Technical)
Phone : 3010221/2242.

4. Deflection of different pressure parts shall be examined carefully and there shall not be any permanent set after release of pressure.

(c) If any repairs are found to be necessary during or subsequent to the hydraulic pressure test, the boiler shall again be subjected to the pressure test specified above after completion of the repairs and after any heat treatment.

Note
Observations and remarks of Inspecting Officer/Inspecting Authority should be recorded for filming with makers' papers.".

(File No.6(6)/95-Boilers)

(V.K. GUPTA) 9/3
Secretary, Central Boilers Board.
Phone : 3013048.

Footnote:- The principal regulations were published in the Gazette of India as S.R.O. No.600 dated 15th September, 1950 and last amended vide Gazette notifications -

(i) GSR 178 dated 24th March, 1990
(ii) GSR 179 dated 24th March, 1990
(iii) GSR 488 dated 9th October, 1993
(iv) GSR 516 dated 23rd October, 1993
(v) GSR 634 dated 25th December, 1993
(vi) GSR 107 dated 26th February, 1994
(Corrigendum GSR 223 dated 14th May, 1994)
(vii) GSR 250 dated 4th June, 1994
(viii) GSR 402 dated 12th August, 1994
(ix) GSR 427 dated 20th August, 1994
(x) GSR 562 dated 12th November, 1994
(xi) GSR 607 dated 10th December, 1994
(xii) GSR 83 dated 25th February, 1995
(xiii) GSR 93 dated 4th March, 1995
(xiv) GSR 490 dated 9th November, 1996
(xv) GSR 582 dated 28th December, 1996
(xvi) GSR 59 dated 25th January, 1997

To

The General Manager,
Government of India Press,
Mayapuri, Ring Road,
NEW DELHI-110064.