(*c*) **Test for Class II Boilers.**—(*i*) From each longitudinal seam test pieces shall be selected for the following tests and stamped by the Inspector for identification.

From the test plate or plates:—

One tensile test specimen for welded seam.
One bend test specimen.
One reverse bend test specimen.
One nick-break test specimen.

The disposition of the specimen shall be in accordance with the sketches in Figure XII/65. The remainder of each test plate shall be retained for re-tests if required.

(*ii*) **Tensile test.**—The dimensions of the test specimen shall be in accordance with the sketch in Figure XII/60. Specimen 1a, and the specimen shall be cut out transversely to the welded seam. When the capacity of the available testing machine does not allow the full specimen to be tested, two narrower tensile specimens shall be substituted. These specimens shall be the full thickness of the plate at the welded joint and their breadth shall be as great as the testing machine will reasonably allow, provided the effective cross sectional area of the test piece is not less than 1½ square inches (*see* Figure XII/60 Specimen 1b). The tensile strength of the welded joint specimen shall be not less than the lower limit specified for the plate.

(*iii*) **Cold bend tests.**—Two bend tests shall be made.

One specimen shall be tested with the outer surface of the weld in tension, and the other with the inner surface in tension. The specimens shall be rectangular in section and shall be cut out transversely to the weld so as to have a width not less than one-and-a-half times the thickness of the plate. The sharp corners of the specimens shall be rounded to a radius not exceeding 10 per cent of the thickness of the specimen.

The specimen to be tested with the outer surface of the weld in tension shall be prepared by cutting to waste the metal local to the inner surface of the weld, so that the desired specimen thickness is obtained (*see* A. Figure XII/64). The specimen to be tested with inner surface in tension shall be prepared by cutting to waste the metal local to the outer surface of the weld so that the desired specimen thickness is obtained (*see* B. Figure XII/64). Where the thickness of the plate permits both specimens may be cut from the same piece of plate, the specimens being located in the plate one above the other (*see* C. Figure XII/64).

Each specimen shall be mounted with the weld midway between the supports set apart at a distance of not more than 5.2 times the thickness of the specimen and pushed through the supports with a former having a diameter equal to three times the thickness of the specimen.

On completion of the test no crack or defect at the outer surface of the specimen shall be greater than 1/16 inch measured across the specimen, or ⅛ inch measured along the length of the specimen. Premature failure at corners of the specimen shall not be considered cause for rejection.

(*iv*) **Nick-breack specimen.**—This specimen shall have a width not less than one-and-a-half times its thickness and the slot shall be cut in each side of the specimen through the centre of the weld and perpendicular to the outer face of the boiler.

The specimen shall then be broken in the weld and the fracture shall reveal a sound homogeneous weld substantially free from slag inclusions, porosity and coarse crystallinity.

134/2/M.of Industry/69-70-21

(*v*) **Additional tests before rejection.**—If any of the test specimens should fail, two re-tests shall be made and both shall meet the specified requirements.

(*vi*) **Specimen after tests.**—If required specimens after tests shall be at the disposal of the Inspecting Authority for examination.

(*d*) **Test for Class III Boilers.**—Specimens for the following tests shall be selected from the test plate or plates and stamped by the Inspecting Officer for identification.

1. One forward bend test.
2. One reverse bend test.

562. Heat Treatment.—All boilers shall be stress relieved by heat-treat ment after completion of all welding and before hydraulic test, when,

(*a*) Constructed to Class I or Class II requirements.

(*b*) The shell thickness in thirty seconds of an inch exceeds

$\frac{D}{3.5}+7$ where D = internal diameter of the shell in inches.

The heat treatment furnace should be sufficiently large to accommodate the whole boiler. The furnace temperature shall be slowly raised to between 600° C and 650° C and the boiler shall remain until it has uniformly reached this temperature which shall be maintained for a period of not less than one hour per inch of plate thickness. The boiler should be allowed to cool slowly in the furnace but if withdrawn shall be effectively screened from draughts.

During heat treatment the official test plates shall be inside the boiler. Where the shell is subjected to a primary stress relieving treatment identical to the final heat treatment to be given to the boiler, the test plates may be placed inside the shell during primary treatment and thereafter cut up and tested without waiting for the final treatment of the boiler.

Where the shell is not subjected to primary stress relieving treatment or is subject to a primary stress relieving treatment which is not identical with the final heat treament the test plates may be placed inside any other boiler of comparable dimensions which is to be heat treated in accordance with this Chapter.

Temperature charts shall be submitted to indicate that the test plates and the boilers they represent have been subjected to identical heating, soaking and cooling treatment.

Alternative procedure for the heat treatment of any boiler may be submitted to the Inspecting Authority for approval.

563. Classification of Fusion-Welded Boilers.—The boilers covered by this Chapter shall be classified in accordance with Table XII/3.

TABLE XII/3

Classification of Fusion-Welded Boilers

Classification	*Limits of application*	*Minimum thickness*
Class I	No limit	$\frac{1}{4}$ inch.
Class II	When the following limits are not exceeded: (*a*) Working pressure—105 pounds per sq. in. (*b*) Working pressure in pounds per sq. in. multiplied by internal diameter in inches=5250.	Boilers up to and including 36 inches internal diameter—5/16 inch
Class III	When the following limits are not exceeded: (*a*) Working pressure—30 lbs. per sq. in. (*b*) Working pressure multiplied by internal diameter in inches=3000.	Boiler over 36 inches internal diameter—$\frac{3}{8}$ inch.

564. Shells.—The working pressure of the cylindrical shell shall be determined by the following formula:

$$WP=\frac{(t-2)\,SC}{D} \quad .. \quad .. \quad .. \quad .. \text{ Equation XII/1}$$

where—

t is minimum thickness of shell plate in thirty-seconds of an inch.
WP is working pressure in pounds per square inch.
D is maximum internal diameter in inches.
S is minimum tensile strength of plate in tons per square inch.
C is a constant, as given below.

In no case, however, shall the factor of safety of the shell be less than 4 or the plate thickness be less than specified in Table XII/3 given under Regulation 563.

C=32 where Class I requirements are complied with.
C=27 where Class II requirements are complied with.
C=23 for Class III boilers when stress relieved.
C=21 for Class III boilers when not stress relieved.

Where boilers have a nest or nests of horizontal tubes, so that there is a direct tension on the tube plates due to the vertical load on the boiler ends or to tube plates acting as horizontal ties across the shell:

(*i*) each alternate tube in the outer vertical row of tubes shall be a stay tube.

(*ii*) the thickness of the tube plates and the spacing of the tubes shall be such that the section of metal taking the load is sufficient to keep the stress within that allowed on the shell plate, as determined by the following formula:—

$$WP=\frac{(t-2SJ)}{2.9\,D} \quad .. \quad .. \quad .. \quad .. \quad .. \text{ Equation XII/2}$$

where—

t is thickness of the tube plate in thirty-seconds of an inch.

WP is working pressure in pounds per square inch.

S is minimum tensile strength of plate in tons per square inch.

D is twice the radial distance of the centre of the outer row of tube holes from the axis of the shell in inches.

J is the percentage strength of the plate through the tube holes, *i.e.*

$$= \frac{100\ (p-d)}{p} \quad .. \quad .. \quad .. \quad .. \quad .. \quad \text{Equation XII/3}$$

p is the vertical pitch of tubes in inches.

d is the diameter of the tube holes in inches.

Note.—The tube plates between the stay tubes shall comply with the requirements for tubes plates (*see* Regulation 577).

565. Horizontal shelves of tube plates forming part of the shell.—The number of gussets required to support the horizontal shelves of tube plates to withstand the vertical load due to the pressure on the boiler ends shall be determined in the following manner:—

For combustion chamber tube plates the minimum number of the gussets shall be—

Where C exceeds 4560 .. .. 1 gusset.
Where C exceeds 6240 .. .. 2 gussets.
Where C exceeds 7440 .. .. 3 gussets.

For the smoke box tube plate the minimum number of gussets shall be:—

Where C exceeds 4560 .. .. 1 gusset.
Where C exceeds 8400 .. .. 2 gussets.

and $C = \frac{PAD}{t}$ .. .. Equation XII/4

where—

A is maximum horizontal dimension of the shell from the inside of the shell plate is to the outside of the tube plate in inches. (*see* Figure XII/61.)

D is inside diameter of the boiler in inches.

P is working pressure in pounds per square inch.

t is thickness of tube plate in thirty seconds of an inch.

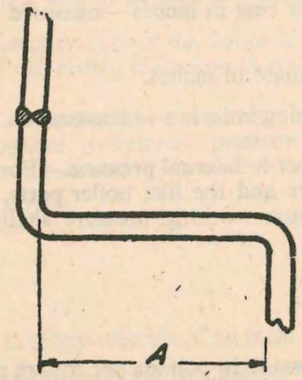

FIG. XII/61.

The shell plates to which the sides of the tube plates are connected shall be not less than 1/16 inch thicker than is required by the formula applicable to shell plates with continuous circularity; and where gussets or other stays are not fitted to the shelves, the strength of the parts of the circumferential seams at the top and bottom of these plates from the outside of one tube plate to the outside of the other, shall be sufficient to withstand the whole load on the boiler end, with a factor of safety of not less than 4.5.

566. Dished end plates for Lancashire and Cornish boilers.—For the dished ends of Lancashire and Cornish boilers without stays and subject to internal pressure the maximum working pressure shall be determined by the following formula:—

$$WP = \frac{(t-8)\ 30 \times S}{R} \quad .. \quad .. \quad .. \quad .. \quad .. \quad \text{Equation XII/5}$$

where—

t is minimum thickness of the end plate in thirty-seconds of an inch.

WP is working pressure in pounds per square inch.

R is inner radius of curvature of the end plate in inches.

S is minimum tensile strength of the plate in tons per square inch.

The inner radius of curvature of the end plate shall not exceed 1½ times the external diameter of the shell to which it is attached.

The inner radius of flanging of the end plate shall be not less than 4 times the thickness of the plate but in no case less than 2½ inches.

Where the end plate has a manhole, compensation shall be obtained by flanging the edge of the opening or by providing a fabricated ring (*see* Figure XII/52).

In either case the depth of the flanging or ring measured at the minor axis shall not be less than that determined by the following formula:—

$$D = \sqrt{TW} \quad .. \quad .. \quad .. \quad .. \quad .. \quad \text{Equation XII/6}$$

where—

D is depth of flange or ring in inches—measured from the outside of the plate to the joint face.

T is thickness of the plate in inches.

W is width of the opening in inches—measured on the minor axis.

567. Dished ends subject to internal pressure.—For unstayed ends of shells and tops of vertical boilers and the like boiler parts, when dished to partial spherical form the maximum working pressure shall be determined by the following formula:—

$$WP = \frac{15 \times S \times (t-1)}{R} \quad .. \quad .. \quad .. \quad .. \quad \text{Equation XII/7}$$

WP is the working pressure in pounds per square inch.

t is thickness of the end plate in thirty seconds of an inch but in no case this shall be less than the thickness of the shell to which it is attached.

R is the inner radius of curvature of the end in inches, which shall not exceed the external diameter of the shell to which it is attached.

S is the minimum tensile breaking strength of plate in tons per square inch, or whatever is allowed for it.

(*b*) The inside radius to which a crown plate is dished shall be not greater than the external diameter of the cylinder to which it is attached.

(*c*) The inside radius of curvature of the flanges to the shell shall be not less than 4 times the thickness of the crown plate and in no case less than $2\frac{1}{2}$ inches.

(*d*) The inside radius of curvature of flanges to uptakes shall be not less than twice the thickness of the crown plate and in no case less than 1 inch.

(*e*) When the end has a manhole in it (t—5), shall be substituted for (t—1) in the formula.

(*f*) The total depth of flange of manhole from the outer surface in inches measured on the minor axis shall be at least equal to—

$\sqrt{T \times W}$ depth of flange in inches .. Equation XII/8

where T is the thickness of the plate in inches and W is the minor axis of the hole in inches.

(*g*) The depth of the crown plate opening from the commencement of the curvature of the flanging radius shall be not less than twice the plate thickness with a minimum of one inch.

* 567-A.

568. Dished ends subject to external pressure.—In the case of unstayed dished ends for the coefficient 15 in Equation XII/7, the coefficient 12 shall be substituted, and R shall be the outer radius of the curvature of plate, which shall not exceed the external diameter of the shell to which it is attached.

For plates exposed to furnace-flame the coefficient shall be 10.5. In no case shall $\frac{R}{t}$ exceed 2.75.

The inside radius of curvature at the flange shall be not less than 4 times the thickness of the end plate and in no case less than $2\frac{1}{2}$ inches.

The inside radius of the curvature of the flange to uptake shall be not less than twice the thickness of the crown plate and in no case less than one inch.

569. Hemispherical crowns.—The maximum working pressure for hemispherical crowns subjected to internal pressure shall be determined by the following formula:—

$$WP = \frac{(t-2)S \times C}{R} \quad .. \quad .. \quad .. \quad .. \quad \text{Equation XII/9}$$

where—

t is thickness of plate in thirty-seconds of an inch.

WP is the working pressure in pounds per square inch.

R is inner radius of curvature in inches.

S is minimum tensile strength of the plate in tons per square inch.

C is a constant, as given below.

In no case, however, shall the factor of safety of the crown plate be less than 4 nor the plate thickness be less than specified in Table given under Regulation 563.

C=32 where Class I requirements are complied with.

C=27 where Class II requirements are complied with.

C=23 for Class III boilers when stress relieved.

C=21 for Class III boilers when not stress relieved.

570. Manholes and other openings in shells.—Manholes and other openings in shells shall be placed as far as possible from any seam. Wherever practicable oval openings shall be arranged with the minor axis parallel with the longitudinal centre line of the boiler. In no case shall the circumferential length of any opening exceed twice the longitudinal width of the opening.

571. Compensation for openings in shells.—Where the width of any opening (measured in a direction parallel to the longitudinal axis of the boiler) exceeds two-and-a-half times the thickness of the shell plate in inches plus $2\frac{1}{2}$ inches, compensation shall be provided.

(*a*) **Area to be compensated.**—The area to be compensated shall be the product of the maximum width of the opening cut in the shell and the thickness of an unpierced seamless shell of similar material calculated by Equation XII/1 with constant C=35 for the same working pressure.

(*b*) **Compensating area.**—Compensation shall be considered adequate when the sum of the following areas is not less than the area to be compensated:

(*i*) The area obtained by multiplying the difference between the actual thickness of the shell and the thickness required for an equivalent unpierced seamless shell by a length 2 (3 inch+Ts), where Ts is the actual thickness of the shell plate in inches.

(*ii*) The net cross sectional area of the frame or pad, or in the case of a branch the cross sectional area of the wall of the branch minus the sectional area of a branch of the same bore having thickness equal to that calculated by Equation XII/1 for the same working pressure (with constant C=35 if seamless), plus the thickness required to withstand external loads. The areas shall be measured within limits such that (a+b) in Figure XII/66 does not exceed 4 inches.

Where the material of a frame, pad or branch has a tensile strength which differs from that of the shell to which it is attached, the compensating area shall be multiplied by the ratio:

$$\frac{\text{Tensile strength of compensating part.}}{\text{Tensile strength of shell plate.}}$$

(*iii*) The cross sectional areas of the welding fillets.

(*c*) **Compensating plates.**—In cases where the sum of (*i*), (*ii*) and (*iii*) is less than the area to be compensated a compensating plate shall be welded to the shell, its total cross sectional area being equal to the amount of the deficit and due allowance being made as above when the tensile strength of the material of the plate differs from that of the shell.

Notwithstanding compliance with the requirements of paragraph (*b*) however, a reinforcing plate shall be fitted around all branches of 4 inches bore and over welded to shell plates having a thickness of $\frac{1}{2}$ inch or less.

The compensating plate may be fitted on the inside or outside of the shell plate as most convenient and its diameter shall not exceed twice the longitudinal width of the opening in the shell.

(*d*) Figure XII/66 shows a welded branch to which foregoing requiremets apply where,

W its width of the opening in the shell in inches.

Ts is actual thickness of shell in inches.

T1 is thickness of an equivalent unpierced seamless shell calculated by Equation XII/1 with C=35, in inches.

Tn is actual thickness of branch in inches.

T2 is minimum thickness body of branch calculated by Equation XII/1 (with C=35 if seamless) in inches.

T3 is thickness required to withstand external loads in inches=$\frac{1}{8}$ inch unless the loading is known to be such as to require a greater thickness and is=O where there is no external loading.

Tc is minimum thickness of compensating plate in inches.

S1 is minimum tensile strength of shell plate in tons per square inch.

S2 is minimum tensile strength of branch in tons per square inch.

S3 is minimum tensile strength of compensating plate in tons per square inch.

W is width of compensating plate in inches measured in the same plate as the shell opening.

Area to be compensated.

$$A = W \times T1$$

Compensating area.

(*i*) Portion of shell available for compensation:—

$$B = 2(3+Ts)\ (Ts-T1)$$

(*ii*) Portion of branch available for compensation:—

$$C = 2(4+Ts)\left[Tn-(T_2+T_3)\right] \times \frac{S_2}{S_4}$$

(*iii*) Portion of welds available for compensation:—

D=Total cross sectional area of the internal and external welding fillets.

If A is greater than (B+C+D), additional compensation is required to make up the difference. In the example shown in Figure XII/66 this is provided by means of a compensating plate, the total compensating area being such that (B+C+D)+Z is not less than A where—

$$Z = 2 \times w \times Tc \times \frac{S_3}{S_1}$$

572. Raised manhole frames, cover plates and joint bolts.—Raised circular manhole frames not exceeding 16 inches in diameter shall not be less than $\frac{3}{4}$ inch thick in all parts.

The circular cover plates and joint flanges for such frames shall be not less than—

1 inch thick for pressures not exceeding 120 pounds per square inch.

$1\frac{1}{8}$ inches thick for pressures exceeding 120 pounds per square inch but not exceeding 200 pounds per square inch.

$1\frac{1}{4}$ inches thick for pressures exceeding 200 pounds but not exceeding 250 pounds per square inch.

For pressure exceeding 250 pounds per square inch, raised circular manhole frames shall not be fitted.

The cover plates shall be secured by at least sixteen steel bolts not less than 1 inch diameter, such that the stress in the bolts due to steam pressure shall not exceed—

5,000 pounds per square inch for 1 inch bolts.

6,000 pounds per square inch for $1\frac{1}{8}$ inches bolts.

6,500 pounds per square inch for $1\frac{1}{4}$ inches bolts.

For the purpose of calculation the pressure shall be assumed to act on the whole area within the pitch circle of the bolts and the bolt area at the bottom of the screw thread shall be taken.

* **573. Standpipes.**—The thickness and bolting of all flanges joining mountings shall be not less than that required by Appendix E, "Tables of Pipe Flanges", for the appropriate pressure, but in no case shall the thickness be less than $\frac{1}{2}$ inch.

(*a*) For pressures up to 360 pounds per square inch the minimum thickness of standpipes fabricated by fusion welding shall be determined by the following formula:—

$$t = D + 6 \qquad \text{Equation XII/10.}$$

where—

t is thickness of standpipe in thirty seconds of an inch.

D is external diameter of standpipe in inches.

Solid forged standpipes shall have a minimum thickness of flange and body in accordance with Table XII/4.

TABLE XII/4

Thickness of solid forged standpipes

Bore of stand pipe	Minimum thickness					
	Design pressure up to and including 160 pounds per square inch		Design pressure above 160 and up to and including 260 pounds per sq. inch		Design pressure above 260 upto and including 360 pounds per square inch	
	Flange joining boiler	Body	Flange joining boiler	Body	Flange joining boiler	Body
inches	inches	inches	inches	inches	inches	inches
1 ..	7/16	3/8	1/2	3/8	3/8	3/8
1¼ ..	7/16	3/8	1/2	3/8	3/8	3/8
1½ ..	7/16	3/8	1/2	7/16	3/8	1/2
2 ..	7/16	3/8	9/16	7/16	3/8	1/2
2½ ..	7/16	3/8	9/16	7/16	7/16	3/8
3 ..	9/16	7/16	5/8	1/2	7/16	3/8
3½ ..	9/16	7/16	5/8	1/2	7/16	3/8
4 ..	9/16	7/16	5/8	1/2	7/16	3/8
4½ ..	9/16	7/16	5/8	1/2	7/16	3/8
5 ..	5/8	9/16	3/4	5/8	7/16	3/8
6 ..	5/8	9/16	3/4	5/8	7/16	
7 ..	5/8	9/16	3/4	5/8	7/16	3/8
8 ..	5/8	9/16	3/4	5/8	7/16	3/8
9 ..	5/8	5/8	3/4	5/8	7/16	3/8
10 ..	5/8	5/8	3/4	5/8	7/16	3/8
	Pressed plate saddle 5/8 inch		Pressed plate saddle 3/4 inch		Pressed plate saddle 7/8 inch	

(*b*) Where a double flanged standpipe is tapered, the thickness of the flange joining the boiler shall correspond to the bore at that flange in accordance with Table XII/4.

NOTE.—It may be necessary to increase the thickness obtained from Table XII/4 or Equation XII/10 to allow for external loading.

574. Stayed flat surfaces (other than crowns of Vertical boilers).—(*a*) Where flat end plates are flanged for connection to the shell, the inside radius of flanging shall be not less than 1.75 times the thickness of the plate with a minimum of 1½ inches.

(*b*) Where combustion chamber fire-box plates are flanged for connection to the wrapper, the inside radius of flanging shall be equal to the thickness of the plate, with a minimum of 1 inch.

(*c*) Where the flange curvature is a point of support, this shall be taken at the commencement of curvature, or at a line 3½ times the thickness of the plate measured from the outside of the plate, whichever is nearer to the flange.

(*d*) Where a flat plate is welded directly to a shell or wrapper, the point of support shall be taken at the inside of the shell or wrapper.

(*e*) The working pressure of flat plates supported by stays, shall be determined by the following formula:—

$$WP = \frac{C(t-1)^2}{A^2+B^2} \quad .. \quad .. \quad .. \quad .. \quad \text{Equation XII/11.}$$

where —

t is thickness of plate in thirty-seconds of an inch.

WP is working pressure in pounds per square inch.

A is horizontal pitch of stays in inches.

B is vertical pitch of the stays in inches.

C is Constant, as given below ;

The constants given below relate to plates which are stress relieved and not exposed to flame.

When plates are exposed to flame the constants shall be reduced by 12½ per cent.

Where various forms of support are used Constant C shall be the mean of the values for the respective methods adopted.

Where stays are irregularly pitched, D^2 shall be taken instead of A^2+B^2, D being the diameter in inches, of the largest circle which can be drawn with the circumference passing through three points of support without enclosing another point of support. No more than two points of support may be located on one side of any diameter of the circle.

The value of the Constant C in Equation XII/11 shall be as follows:

(i) Where stays are screwed through the plates and, in addition, are fillet welded to the plates on the outside, the size of the weld being 0·25 of the diameter of the screwed portion of the stay (*see* Figure XII/39).

C = 57

(ii) Where stays are screwed through the plates and, in addition, are fillet welded to the plates on the outside the size of weld being 0.35 of the diameter of the screwed portion of the stay (*see* Figure XII/40).

C = 80

(iii) Where plain stays are strength welded into the plates (*see* Figure XII/41).

C = 80

(iv) Where plain bar stays pass through holes in the plates and are secured as shown in Figure XII/42.

C = 90

(v) Where plain bar stays pass through holes in the plates and are fitted on the outside with washers and are secured as shown in Figures XII/43 (a), XII/43(b)

C = 100

(vi) Where plain bar stays pass through holes in the plates and are fitted on the outside with washers as shown in Figures XII/44(a), XII/44(b), XII/45 (a) and XII/45(b).

C = 110

(vii) Where plain bar stays pass through holes in the plates and are fitted on the outside with washers as shown in Figures XII/46(a), XII/46(b).

C=120

(viii) Where the flat plate is flanged for attachment to the shell, flue or wrapper [*see* Sub-regulation (c) above].

C=110

(ix) Where the flat plate is welded directly to the shell, flue or wrapper [*see* Sub-regulation (d) above].

C=110

(x) Where the support is a gusset or link stay.

C=80

(xi) For the lower portion of the front end plate of a Lancashire boiler containing the manhole the values of D and C to be used in Equation XII/11 shall be as follows:—

D=diameter, in inches of the largest circle which can be drawn enclosing the manhole and passing through the points of support formed by the gusset stays and the connections to the shell and furnaces. Where the circle passes through only three of the possible five points of support mentioned the remaining two shall be included within the circle.

C=300

(xii) In Cornish boilers where it is necessary to strengthen the portion of the end plate outside the wing gussets, suitable section stiffeners shall be secured to the plates by full fillet welds within the circle D, and the appropriate constant C shall be increased by 30 per cent. The stiffeners shall be placed in such a position, and the section used shall be such, that:—

(*i*) The unstayed area will be approximately equally divided.

(*ii*) The load will be transmitted at each end as directly as possible to the gusset stays or other supporting boundaries.

(*iii*) The thickness of the vertical rib of any tee bar stiffener shall be not less than the thickness of the end plate.

(*f*) In the case of smaller boilers where the end plates are supported in the steam space by a single substantial tee bar (continuously fillet welded to the plate with not less than 3/8 inch. fillet welds) extending across the plate to the commencement of curvature of the flange or the toe of the fillet weld securing the end plate to the shell, or where such plates are supported with a deep bulb extending across the plates as described above, the thickness of the plate shall be determined by Equation XII/11 the values of D and C being as follows:—

(*i*) For the portion of the plate above the stiffeners :

D is diameter in inches, of the largest circle passing through the centre of the tee or bulb and the commencement of flange curvature or the inside of the shell, whichever is applicable :

C=80

(*ii*) For the portion of the plate below the stiffeners:

D is diameter in inches of the circle passing through the centre of the tee or bulb and two adjacent screwed stays:

C=5

or, D is diameter in inches of the circle passing through the centre of the tee or bulb and the centre line of the top row of tubes:

C=35

575. Flat crown plates for vertical boilers.—Flat crown plates shall be supported by the uptake and/or bar stays. The inside radius of curvature of the flange to the shell or fire box shall be not less than four times the thickness of the plate and in no case less than 2½ inches where the plate is flanged for attachment to the uptake the inside radius of curvature of the flange shall be not less than twice the thickness of the plate and in no case less than 1 inch. The thickness of flat crown plates shall be determined by Equation XII/11, D^2 being substituted for (A^2+B^2), and C being defined as follows:

Where the crown plate is supported by an uptake only D is diameter of the largest circle which can be drawn between the connections to the shell or fire box and uptake, in inches [*see* Regulation (574) (a), (b), (c), (d)].

C=55

Where bar stays are fitted in accordance with Regulations 587 and 588, D is diameter of the largest circle which can be drawn through support, in inches.

C is the mean of the values for the respective point of support through which the circle passes (*see* Regulation 574).

576. Wide water spaces between and around tube nests.—Except as specified in Regulation 577 stay tubes shall be fitted in the tube nest. The working pressure of the tube plate in the wide water space between tube nests shall be determined by the following formula:

$$WP=\frac{C(t-1)^2}{A^2+B^2} \quad \text{.....Equation XII/12}$$

where—

t is thickness of the tube plate in thirty seconds of an inch.

WP is working pressure in pounds per square inch.

A is width of the wide water space between the tube nests in inches (measured at the centre line of the stay tubes).

B is pitch of the stay tubes in the boundary rows of the wide water space in inches.

Where the stay tubes are welded to the tubeplates in accordance with Figure XII/67 or XII/68, with tubes lightly expanded before welding:

C=56 if the plates are exposed to flame.

C=64 if the plates are not exposed to flame.

Where the stay tubes are welded to the tubeplates in accordance with Figure XII/69 with tubes lightly expanded before welding:

C=70 if the plates are exposed to flame.

C=80 if the plates are not exposed to flame.

Where the stays are irregularly pitched D^2 shall be taken instead of (A^2+B^2) where D is the diameter of the largest circle which can be drawn through any three points of support without enclosing another point of support (*see* Figures XII/74, XII/75, XII/76 and XII/77). Where various forms of supports are used, the value of C shall be the mean of the values for the respective methods adopted. At the attachment of the end plate to shell, furnaces of flues, the point of support and the constant C to be used shall be taken in accordance with Regulation 574.

For the portions of the end plates between the top rows of tubes and the steam space stays, Equation XII/12 shall apply, B being taken as the distance between the centre line of the top rows of tubes and the centre of the bar stays or other point of support and A being taken as

$$\frac{A_1+A_2}{2}$$

where—

A_1 is the distance between the centres of bar stays or other method of support, and

A_2 is the horizontal distance from the centre of one stay tube and the centre of the next stay tube in the top boundary row. Where no stay tubes are fitted A_2 shall be taken as equal to four times the horizontal pitch of the plain tubes. Where no stay tubes are fitted the support afforded by the plain tubes shall not be taken to extend beyond the line enclosing the outer surfaces of the tubes except that, between the outside of the wing row of tubes and the attachment of the end plate to shell, there may be an unsupported width equal to the flat plate margin as given by Equation XII/23.

577. Parts of flat plates within tube nests.—(a) Where the total area of all tube nests indirectly fired Multitubular boilers exceeds 7 square feet, stay tubes shall be fitted.

Where the total number of tubes in Horizontal Multitubular waste heat boilers and direct fired Loco-type boilers is arranged in one nest, the area of which exceeds 21 square feet, stay tubes shall be fitted.

In all cases, where the total number of tubes is arranged in more than one nest, stay tubes shall be fitted.

The working pressure of the tubeplates with the tube nests shall be determined by the following formula:

Where stay tubes are fitted.

$$WP=\frac{C\,(t-1)^2}{M^2} \quad \text{.....Equation XII/13}$$

where—

t is thickness of the tubeplate in thirty seconds of an inch.

WP is working pressure—pounds per square inch.

M is mean pitch of the stay tubes in inches—being the sum of the four sides, of any quadrilateral bounded by four quadrilateral adjacent stay tubes divided by 4.

C is 56 for plates exposed to flame.

64 for plates not exposed to flame.

Stay tubes secured in accordance with Figure XII/67 or XII/68.

C=70 for plates exposed to flame.

C=80 for plates not exposed to flame.

Stay tubes secured in accordance with Figure XII/69.

(b) Where the area of the tube nest does not exceed 7 square feet in the case of direct fired boilers or 21 square feet in the case of Waste Heat boilers, and direct fired Loco-type boilers and stay tubes are not fitted, the ends of all tubes may be welded at the gas inlet end and welded or expanded at the outlet end.

Alternatively, the tubes may be expanded and beaded at the inlet end, and expanded at the outlet end. In both cases the working pressure of the tube plate shall be determined by Equation XII/13, where M=four times the mean pitch in inches of the plain tubes in the nest.

C=50 for plates exposed to flame.

C=60 for plates not exposed to flame.

578. Manhole openings in flat plates.—Where manholes are located in flat plates, the openings shall be suitably compensated.

Compensation shall be obtained by flanging the edge of the opening, or by providing a fabricating ring (*see* Figures XII/52, XII/53, XII/54, XII/55 and XII/56).

The manhole in the lower portion of the flat front end plates shall be fitted with a flanged strengthening ring, the thickness of the flat portion of which shall be not less than $(1.5T+\frac{1}{8}$ inch)

where T=the thickness of the end plate in inches, and in boilers of 7 feet and 6 inches diameter and over the manhole frame shall be fitted with a peak to reinforce the portion of the end plate between and below the furnaces and this peak shall be securely welded thereto.

In all cases the depth of the flanging or ring shall not be less than that determined by Equation XII/6.

NOTE.—Where the manhole is located in or between tube nests in Multitubular boilers or below the furnances of other Boilers the stay tubes in the boundary rows, or the gusset stays, as applicable, shall be arranged as closely as practicable to the manhole.

579. Plain tubes.—(a) **Attachment.**—Plain tubes may be welded at both ends, welded at the inlet end and expanded at the outlet end, or expanded at both ends.

Where the tubes are expanded only, the process shall be carried out with expanders having parallel rollers, and the expanded portion of the tube shall be parallel through the full thickness of the tubeplate. In addition to expanding tubes may be bell-mouthed or beaded at the inlet end.

Where the tube is welded to the tubeplate, the tube should be lightly expanded to grip the tube hole before welding.

(b) The maximum working pressure for the tube subject to the external pressure shall be :

$$WP = \frac{100\,(t-6)}{D} \quad \text{.....Equation XII/14.}$$

where—

t is thickness of the tubes in one hundredths of an inch.

D is external diameter of the tubes in inches.

No tube shall be less than 12 S.W.G. (0·104") thick.

(c) The working pressure of tubes subjected to internal pressure shall be determined by the following formula:

$$WP = \frac{140\,(t-10)}{D} \quad \text{.....Equation XII/15.}$$

where—

t is minimum thickness of tubes in one hundredths of an inch.

WP is working pressure in pounds per square inch.

D is outside diameter of tubes in inches.

580. Pitch of tubes.—The spacing of tube holes shall be such that the minimum width in inches of any ligament between the tube holes shall be not less than:—

$$\frac{D}{8} + \frac{1}{2}$$

alternatively,

the thickness and cross-section of the plate between the tube holes shall be not less than

0.125D+0.2=minimum thickness in inches.

0.17D+0.025=minimum cross-section in square inches where D is diameter of the tube hole in inches.

In no case shall the minimum thickness of any tube plate in the tube area be less than the following limits:—

T=½ inch.

where the diameter of the tube hole does not exceed 2 inches.

T=9/16 inch.

where the diameter of the tube hole is greater than 2 inches.

581. Stay tubes.—Stay tubes shall be of steel seamless or electrically resistance welded.

(a) *Minimum thickness of stay tubes.*—Minimum thickness of stay tubes shall be such that the stress on the net cross-sectional area either at the bottom of the threaded part or at the middle of the tube whichever is the lesser shall not exceed 527 Kg./Cm² (7500 lbs. per sq. in). Thickness of stay tubes at any part shall not be less than 5 mm. (3/16 in.)

(b) The maximum working pressure for screwed in stay tube shall be calculated by the following formula:

$$WP = \frac{5900}{A}\left\{\left(D - \frac{1{\cdot}28}{N}\right)^2 - D_1^2\right\} \quad \text{.....Equation XII/16}$$

D is diameter of the stay tube over threads in inches.

D is internal diameter of the tubes under the threads in inches.

N is number of threads per inch.

A is the area in square inches supported by one Stay tube, measured from centre to centre of stay tubes. When the area contains tubes or parts of tubes their aggregate area, calculated from their smallest external diameter of body when intension and smallest internal diameter when in compression, shall be deducted from the area of the containing figure and the remainder used as A in the formula.

Where stay tubes have their thickness increased at the screwed, ends to provide for plus threads, the increased thickness shall be obtained by upsetting and not by welding, and the tubes shall be subsequently annealed.

Stay tubes may be attached to the tube plates either by screwing or by metal arc welding.

Where stay tubes are screwed into the tube plates they shall be screwed with a continuous thread not finer than 11 threads per inch at both ends and shall be expanded into the tube plates, by roller expander and, if desired, may be seal welded.

Welded attachment of stay tubes be as shown in Figures XII/67, XII/68 and XII/69.

582. Compression of tube plates.—(a) For fire-box or combustion chamber tube plates which are subject to compression due to the pressure on the roof plate, the maximum working pressure shall be:

$$WP = \frac{C \times (P-D) \times t}{L \times P} \quad \text{.....Equation XII/17}$$

t is thickness of the tube plate in thirty seconds of an inch.

P is pitch of the tubes in inches, measured horizontally where the tubes are chain pitched or diagonally where the tubes are zig zag pitched and the diagonal pitch is less than the horizontal.

D is internal diameter of the plain tubes in inches.

L is internal length of the fire-box or combustion chamber in inches measured at top between tube plate and firehole plate or back plate, or between tube plates in double ended boilers with combustion chambers common to two opposite furnaces.

C=875.

Provided that the above formula shall not apply in the cases of fire-boxes where the girders do not rest on the tube plate, or where the roof plate is stayed direct to the outer shell or to girders supported by the shell.

134/2/M. of Industry/69-70-22

(b) Where girders rest on the side plates or the roof plate is so formed that the load is carried both by side and end plates, the compressive stress on the plates shall not in either case exceed 14,000 pounds per square inch.

583. Girders for fire-box and combustion chamber crowns.—(a) For girders supporting crown plates of rectangular fire-boxes, where the ends of the girders are supported by the vertical end or side plates, their proportions shall be calculated by the following formula:

$$WP = \frac{C S T d^2}{L^2 Y} \quad \text{.....Equation XII/18}$$

Where—

WP is Working pressure in pounds per square inch,

S is Minimum tensile stress of the material in tons per square inch,

T is Total thickness of the stay in thirty seconds of an inch,

d is Depth of the girder stay in inches,

L is Length of girder stay in inches measured between the inside of the tube plate and the firehole plate, or between the inside of the side plates, according to the method of support.

Y is Pitch of girder stays in inches.

C=22 for steel plates or steel forgings,

=19 for steel castings.

(b) Where girders are welded to the crown plate the dimensions of the welds shall be such that the stress calculated on an area equal to the sum of the effecttive lengths of the welds attaching each girder multiplied by the effective throat thickness shall not exceed 7,500 pounds per square inch multiplied by the appropriate weld factor in Table XII/7, ("effective length" and "effective throat thickness" are defined in Regulation 591). The load on the welds shall be taken as that due to the design pressure acting on the area LY; L and Y being as defined in Regulation 583.

584. Girder sling stays.—For slung girders the proportion of slings, links, pins and connections to the shell shall be sufficient to carry the whole load that would otherwise be carried on the toes of the girders and for any of the above parts in tension a stress of 9,000 pounds per square inch of net section, and for parts in shear a stress of 8,000 pounds per square inch of net section shall not be exceeded. In the case of parts in double shear, the net area of the section should be taken as 1·875 times the single section.

585. Stays for fire-boxes and circular furnaces.—(a) *Solid screwed stays*—for screw stays to combustion chambers and fire-boxes and for longitudinal and cross stays, the maximum working pressure for the stays is to be calculated from the appropriate one of the following two formulae:—

$$WP = \frac{C}{A}\left(D - \frac{1.28}{N}\right)^2 \quad \text{.....Equation XII/19}$$

$$WP = \frac{C \times D^2}{A} \quad \text{.....Equation XII/20}$$

WP is the working pressure in pounds per square inch,

D is diameter of stays over threads in inches.

D1 is diameter of body of stay at its smallest part in inches.

N is number of threads of stay per inch.

A is area in square inches supported by one stay for area to be supported by stays near tubes in fire-box tube plates of Loco-type boilers, [*see* Regulation 193(a)].

C=7,100 for steel or special wrought iron screw stays to combustion chamber or fire-boxes,

C=8,640 for steel longitudinal or cross stays fitted with nuts.

=4,700 for copper stays.

Where stays are made with enlarged ends and the body of the stay is smaller in diameter than at the bottom of the thread the working pressure shall be calculated from the second formula.

(b) *Circumferential stays for circular furnaces and fire-boxes.*—The diameter of the stay shall be not less than $\frac{3}{4}$ inch or twice the thickness of the fire-box plate, whichever is the greater. In the case of screwed threads the diameter shall be measured over the threads.

The pitch of the stays at the fire-box shall not exceed 14 times the thickness of the fire-box plate.

586. Fire-box Crown stays for Loco-type Boilers.—Where fire-box crown stays are directly attached to a semi-cylindrical outer casing, and the fire-box top is cambered and fitted with stays arranged as shown in Figure XII/78, the thickness of the outer casing shall be sufficient to provide not less than three engaging threads, of which not less than one shall be full thread in stays not normal to the stayed surface, but if the thickness of the plate is not sufficient to give one engaging full thread the plate shall be reinforced.

Where vertical stays only are used to take part of the load on the fire-box top, boilers with shells 4 feet and 6 inches diameter and over shall be fitted with transverse stays (*see* Figure XII/79). Stays may be attached as shown in Figures XII/39, XII/40 and XII/41.

587. Longitudinal Bar Stays.—The maximum working pressure for longitudinal bar stays is to-be calculated from the appropriate one of the following two formulae:—

$$WP = \frac{C}{A}\left(D - \frac{1.28}{N}\right)^2 \quad \text{.....Equation XII/21}$$

$$WP = \frac{C \times D_1^2}{A} \quad \text{.....Equation X II/22}$$

WP is working pressure in pounds per square inch,

D is diameter of stays over threads in inches,

D_1 is diameter of body of stays at its smallest part in inches,

N is the number of threads of stay per inch,

A is area in square inches supported by one stay.

C is values given in Table below :

TABLE XII/5

Stress on Longitudinal Bar Stays

Range of tensile strength of bar	Value of C
tons per square inch	pounds per square inch
26/30	7850
28/32	8640
30/34	9420
32/36	10200

Where bar stays are fitted in vertical boilers, not less than four bar stays shall be fitted to boilers of 4 feet and over but under 5 feet in diameter; five bar stays to boilers of 5 feet and over but under 6 feet in diameter; six bar stays to boilers of 6 feet and over in diameter.

In no case, shall the diameter of the stay at any part be less than 1 inch. Where joined stays are fitted, the strength of the knuckle joint employed shall be at least equal to the strength of the remainder of the bar stay.

588. Loads on Stay Tubes and Bar Stays.—Stay tubes and bar stays shall be designed to carry the whole load due to the pressure on the area to be supported, the areas being calculated as follows :—

(*a*) For a stay tube within the tube nest the net area to be supported shall be the product of the horizontal and vertical pitches, in inches, of the stay tubes less the area of the tube holes embraced. Where the pitch of the stay tubes is irregular the area shall be taken as the square of the mean pitch of the stay tubes (*i.e.*, the square of $\frac{1}{4}$ of the sum of the four sides, of any quadrilateral bounded by four adjacent stay tubes), less the area of the tube holes embraced.

(*b*) For a stay tube in the boundary row, or for a bar stay, the net area to be supported shall be the area, in square inches enclosed by lines passing midway between the stay and the adjacent points of support and by the boundary margin (*see* Regulation 589), less the area of any tubes or stays embraced.

(*c*) In the case of a bar stay where there are no stay tubes in the tube nest the area to be supported shall extend to the tangential boundary of the tube nest.

589. Flat Plate Margins.—The amount of support in relief of the stays which may be attributed to the shell, furnaces or flues to which flat plates are attached, shall not exceed that determined by the following formulae :—

Width of margin in inches=

$$\frac{C(t-1)}{\sqrt{W.P.}} \quad \ldots \quad \text{Equation XII/23}$$

t is plate thickness in thirty seconds of an inch.

W.P. is working pressure in pounds per square inch.

C=3.47 for plates exposed to flame.

C=3.70 for plates not exposed to flame.

Where the plates are flanged, the margin shall be measured from the commencement of curvature of flanging, or from a line $3\frac{1}{2}$ times the thickness of the plate measured from the outside of the plate, whichever is nearer to the flange. Where the flat plate is not flanged for attachment to the shell or flue tubes and is welded as shown in figure XII/12 or XII/16 the width of the margin shall be measured from the inside of the shell or the outside of the flue tube, whichever is applicable.

In no case, however, shall the diameter D of the circle forming the boundary of the margin supported by the uptake of a vertical boiler be greater than that found by the following formula :—

$$D=\sqrt{\frac{5000A}{W.P.}}+d^2 \cdots\cdots\cdots \text{Equation XII/24}$$

A is cross sectional area of the uptake tube in square inches.

W.P. is working pressure in pounds per square inch,

d is external diameter of uptake in inches.

590. Breathing space.—Gusset stays shall be arranged to give sufficient bearing space around the furnace connections and tube nests (*see* Figures XII/70 to XII/77 and XII/80). The proportions shown in Table XII/6 are recommended for the portion of the end plates above the furnaces and the flues :—

TABLE XII/6

Breathing Space

Thickness of end plate	Diemension 'L'
Inches	inches
1/2	10
9/16	11
5/8	
11/16	
3/4	
13/16	
Over 13/16	$13\frac{1}{2}$

The breathing space below the flues shall be approximately one-half the dimensions given in Table XII/6.

For gusset stays above the tube nests, as fitted in multitubular waste heat boilers without internal furnaces, a breathing space of 8 inches from the centre line of the adjacent tubes to the toe of the gusset angle or plate, may be maintained. For the back end stays below the furnaces of multitubular dryback boilers a breathing space of 6 inches may be maintained where the flues are constructed in accordance with Regulation 546.

Where the flues are constructed of corrugated sections welded together a breathing space of 4½ inches may be maintained.

* **591. Gusset and Link Stays.**—For welded lancashine cornish and cylindrical horizontal multitubular type boilers, all-welded gusset stays shall not be used. To ensure flexibility link stays, bar stays or suitably designed gusset stays other than the all-welded type shall be used. All welded gusset stays, however, may be used in cylindrical horizontal waste heat and cylindrical vertical multitubular boilers.

(*a*) *Load on each stay.*—Each gusset or link stay supporting the flat end plate of a boiler shall be designed to carry the whole load due to pressure on the area it supports. The area supported by any one stay shall be obtained by considering the total area to be supported which lies within the limits of the flat plate margins and dividing this area by boundary lines drawn between the stays. These boundary lines shall be at all points equidistant from the adjacent points of support in the area under consideration.

The effective uniformly distributed load on a triangular gusset plate or on a diagonal link stay shall be assumed to be equal to the perpendicular load on the portion of the end plate to be supported (determined as above) multiplied by L/L_1 (*see* Figures XII/81, XII/82 and XII/83).

(*b*) *Gusset plates.*—Gusset plates shall be so proportioned that the angle "V" (*see* Figures XII/81 and XII/82), is not less than 60°.

The thickness of the gusset plate shall be such that the stress in the plate to withstand the effective uniformly distributed load (as defined above) calculated on the smallest cross-section on Line XX or YY (Figures XII/81 and XII/82), shall not exceed one-seventh of the minimum tensile stress of the plate used but in no case shall the thickness be less than seven-eighths of the thickness of the shell, plate with a minimum of 7/16 inch.

Where all-welded gusset stays are used a stiffening plate shall be welded at the toe of the gusset where it is secured to the end plate (*i.e.*, where the maximum stress occurs) (*see* Figure XII/81).

(*c*) *Link stays.*—Link stays shall be so arranged that the angle "V" (Figure XII/83) is not less than 60° and the dimensions shall be such that the stress in the stay at its weakest part does not exceed one-seventh of the minimum tensile stress of the plate used.

(*d*) *Anchor plates angles, link pins and the like members.*—The strength of anchor plates, angles and link pins calculated at the weakest section shall be as follows :—

(*i*) Link pins shall be so designed that the shear stress does not exceed 8,000 pounds per square inch, the strength of pins in double shear being taken as 1.875 times the strength of pins in single shear.

(*ii*) Anchor plates or angles shall be so designed that the calculated stress does not exceed one-seventh of the minimum tensile stress of the material used, but in no case shall the thickness be less than seven-eighths of the thickness of the shell plate with a minimum of ½ inch, nor the length of the portion attached to the end plate be less than the distance between the lines of end to shell flat margin and the breathing space line around the flues or tube nests.

(*e*) *Weld attachment.*—Where gusset plates, anchor plates or angles are welded to the shell and/or end plates, the attachment shall be by means of continuous fillet welds on each side or by but welds prepared in accordance with Paragraph 2, details 1, m, n, or p of Appendix A of this Chapter.

The welds shall be of such dimensions that the stress calculated on an area equal to the effective length of the weld multiplied by the effective throat thickness shall not exceed that permitted for the parent metal multiplied by the appropriate weld factor in Table XII/7.

The effective length of a weld shall be taken as that length of weld which is of the specified size throughout.

For open-ended fillet welds the effective length shall be the overall length less twice the weld size.

For the purpose of stress calculation the effective throat thickness of a butt weld shall be taken as the thickness of the gusset or anchor plate and the effective throat thickness of fillet weld shall be taken as 0.7 of the fillet size. For compound welds the effective throat thickness shall be the sum of those of the constituent parts.

TABLE XII/7

Weld Attachments

Form of weld	Weld factor		
	Not stress relieved		Stress relieved
Single J or bevel butt-welds (with or without superimposed fillet).	Unsealed Sealed	0.35 0.60	0.45 0.70
Double J or bevel butt-welds [with or without super-imposed fillet(s)]		0.60	0.70
Double fillet welds		0.55	0.65

592. Furnaces and Flue Sections of Horizontal Boilers.—(a) Plain furnaces : The working pressure of plain furnaces shall be the lesser of the two obtained by the use of the following two formulae :—

$$W.P.=\frac{1450}{D}\times\frac{(t-1)^2}{(L+24)}\cdots\cdots\text{Equation XII/25}$$

$$W.P.=\frac{50}{D}[10\ (t-1)-L]\cdots\cdots\text{Equation XII/26}$$

t is minimum thickness of plate in thirty seconds of an inch.

D is external diameter of furnace or flues in inches.

W.P. is working pressure in pounds per square nch.

L is length of section in inches, between centres of points of substantial support (*see* Figures XII/21, XII/22, XII/23, XII/24 and XII/25).

The thickness of any plain furnace or flue section shall not exceed 7/8 inch or be less than 3/8 inch.

(*b*) **Stiffeners.**—Where stiffeners are used as shown in Figures XII/21 and XII/22, the moment of inertia of the stiffener shall be not less than that required by the following formula:—

$$I=\frac{0.14D^3PL}{E}\ldots\ldots\text{Equation XII/27}$$

Where—

D is external diameter of flue in inches.

P is working pressure in pounds per square inch.

L is length of section in inches between centres of points of substantial support.

E is modulus of elasticity in pounds per square inch, at the design temperature of the metal (27.8×10^5).

I is moment of inertia in inches ^{4} of stiffening ring about its neutral axis.

(*c*) **Loco type fire-box crowns.**—Where loco type fire-box crowns are made with a large radius at each side, as in Figure XII/79, the crown shall be provided with stiffeners as shown. The number of stiffeners or points of support shall be determined by Equations XII/25, XII/26, and the moment of inertia of the stiffeners by Equation XII/27 taking D as 2R in Figure XII/79.

(*d*) **Corrugated furnaces of horizontal boilers.**—The maximum working pressure be allowed on corrugated furnaces shall be determined by the following formula:—

$$W.P.=\frac{C}{D}(t-1)\ldots\ldots\ldots\text{Equation XII/28.}$$

W.P. is working pressure in pounds per square inch.

D is the least external diameter in inches measured at the bottom of the corrugations of the waterside.

t is the thickness of the furnace plate in thirty seconds of an inch measured at the bottom of the corrugation or chamber.

C=480 for Fox, Morrison, Deighton, and other similar furnaces and 510 for the Leeds Forge Bulb suspension Furnace.

No corrugated furnace shall be more than 7/8 inch or be less than 3/8 inch thick. The depth of corrugations plus the thickness of the plate shall be less than 2 inches.

593. **Plain Furnaces of Vertical Boilers.**—The maximum working pressure of Plain Furnaces of Vertical boilers shall be the lesser of the two values obtained by Equations XII/25 and XII/26.
where—

D=external diameter of the firebox in inches. Where the firebox is tapered the diameter taken shall be the mean of that at the top and at the bottom where it meets the substantial support from the flange or ring.

L is length of the firebox in inches between points of substantial support measured from the commencement of flange curvature or from the foundation connection, or from a row of screwed stays which comply with Regulations 550(b), 585 (b), whichever is applicable.

In no case, however, shall the thickness be more than 7/8 inch. For fireboxes under 2 feet and 6 inches in diameter, the thickness shall be not less than 5/16 inch and for fire boxes 2 feet and 6 inches in diameter and over the thickness shall be not less than 3/8 inch.

594. Corrugated Fireboxes of Vertical Boilers.—For the semi-spirally corrugated fireboxes of 'Sentinel' standard motor wagon boilers the working pressure shall be determined by the following formula—

$$W.P.=\frac{C(t-1)}{D} \quad \text{.....Equation XII/29.}$$

W.P. is working pressure in pounds per square inch.

t is thickness of the firebox plate in thirty seconds of an inch.

D is mean of the external diameters of firebox measured over the plain part at each end at commencement of curvature of flange.

C=390.

No corrugated furnace shall be less than 3/8 inch thick.

595. Hemispherical Furnaces of Vertical Boilers.—When furnaces are hemispherical in form and subject to pressure on the convex side and are without support from stays of any kind the maximum working pressure shall be found by the following formula:—

$$W.P.=\frac{275\,(t-1)}{R} \quad \text{.....Equation XII/30.}$$

W.P. is working pressure in pounds per square inch.

t is thickness of the top plate in thirty seconds of an inch.

R is outer raidus of curvature of the furnace in inches.

The thickness of these furnaces shall in no case exceed 7/8 inch.

596. Foundations of Vertical Boiler Furnaces.—When circular furnaces of fireboxes of vertical boilers are not connected to the shell crown by uptake tube, smoke tubes or bolt stays and the whole load on the firebox vertically is borne by the bottom part of the firebox where it is connected to the shell the working pressure for the part, if firebox is joggled out to meet the shell or if any ogee ring is fitted, shall not exceed that found by the following formula:—

$$W.P.=\frac{C(t-1)^2}{D(D-D_1)} \quad \text{.....Equation XII/31.}$$

W.P. is working pressure in pounds per square inch.

t is thickness of the joggled firebox plate or ogee ring in thirty seconds of an inch.

D is inside diameter of the boiler shell in inches.

D_1 is outside diameter of the joggled firebox at the commencement of curvature above joggled part or the outside diameter of the firebox where it joins the ogee ring.

C=140 for Ogee rings (*see* Figures XII/26 and XII/27).

C=100 where 'U' ring section is used (*see* Figure XII/28).

597. Foundations of Loco-type Boiler Fireboxes.—Where the firebox roof in loco-type boilers is, not stayed direct to the external casing crown or to girders carried by the casing or if not connected to the casing by slings the working pressure for the parts, if plates are joggled out to meet the casing or if an ogee ring is fitted, shall not exceed that found by the following formula :—

$$W.P.=70\frac{(t-1)^2\times(L+W)}{L+W(W-W_1)} \quad \text{.....Equation XII/32}$$

WP is working pressure in pounds per square inch

t is thickness of the joggled firebox side plates or fire hole plate (which ever is less) or ogee ring in thirty seconds of an inch.

L is length of firebox casing in inches measured between the water sides of front end plate and saddle plate at the foundation seam.

W is width of firebox casing in inches measured between the water side of casing side plates at the foundation seam.

W_1 is width of firebox in inches measured between the water sides of firebox side plates at the commencement of curvature above joggled part or where it joins the ogee ring.

Where only a comparatively narrow strip of the firebox roof is stayed directly to the casing crown the area so stayed shall be deducted from the area represented by LXW in the bottom line of the formula thus :

$(L\times W-A)(W-W_1)$ and so used in Equation XII/32 in determining the working pressure for the parts, "A" being the area in square inches of the part of roof supported by the casing crown.

598. Uptakes of Vertical Boilers.—The working pressure for uptake tubes of vertical boilers shall be determined by the following formula:—

(*i*) When an internal liner is not fitted:—

$$W.P.=\frac{100(t-2)}{D} \quad \text{.....Equation XII /33}$$

(*ii*) When an internal liner is fitted extending below the low water level:—

$$W.P.=\frac{725}{D}\times\frac{(t-1)^2}{(L+24)} \quad \text{.....Equation XII/34}$$

where—

W.P. is working pressure in pounds per square inch.

T is thickness of the uptake in thirty seconds of an inch.

D is external diameter in inches.

L is length of the uptake in inches, measured between the circumferential seams.

In no case shall the thickness of an uptake tube be less than 3/8 inch.

599. Cross Tubes.—Internal diameter of cross tubes shall not exceed 12 inches. The working pressure of the tubes shall be determined by the following formula :—

$$W.P.=\frac{200\ (t-7)}{D} \quad \text{.....Equation XII/35}$$

t is thickness in thirty seconds of an inch of the cross tube.

D is internal diameter in inches of the cross tube.

In no case shall be thickness of a cross tube be less than 5/16 inch.

600. Pads Welded to shell or the attachment of Flanged Mountings.—(*see* Figures XII/90)—The size of outer peripheral fillet welds by which circular pads are attached to shell plates shall be determined by the following formula XII/36, but shall in no case be less than the inner welds or nor less than the minimum specified for plate thickness in Table XII/3:—

$$L_0=\frac{2A-D_1L_1}{D_0} \quad \text{.....Equation XII/36}$$

where—

L_0 is size of fillet weld around outer periphery of pad, in inches.

L_1 is size of fillet weld around inner periphery of pad, in inches.

A is cross sectional area of opening in shell (based on minimum thickness in square inches *see* Regulation 571).

D_0 is outer diameter of pad in inches.

D_1 is inner diameter of pad in inches.

601. Hydraulic and Hammer Tests.—(a) **Class I Boilers.**—Each Class I Boiler shall on completion of all welding and/or repairs and after heat-treatment, be subjected to a hydraulic test of 1—1/4 times the working pressure and while under this pressure, the welds shall be given a thorough hammer test throughout their length. The pressure shall then be released and afterwards raised to 1—1/2 times the working pressure +50 pounds per square inch and steadily maintained for a length of time sufficient to enable an inspection to be made of all seams and connections, but for not less than half-an-hour.

(*b*) **Class II Boilers**—Each Class II Boiler shall after heat treatment, be subjected to the same form of test as for Class I Boilers, except that every Boiler shall be given a hammer test and the hydraulic pressure to be applied for the test shall be 1—1/2 times the working pressure. The pressure shall be released and then raised to twice the working pressure.

During Hammer test care should be taken to avoid damage to the surface of the plate.

Should the hydraulic test reveal any defect in the welded seam it shall not be repaired unless agreed upon by the Inspecting Authority.

On completion of agreed repairs to the boiler which has previously been stress relieved by heat treatment this treatment shall, if required by the Inspecting Authority, be repeated and the boiler shall again be subjected to the hydraulic test.

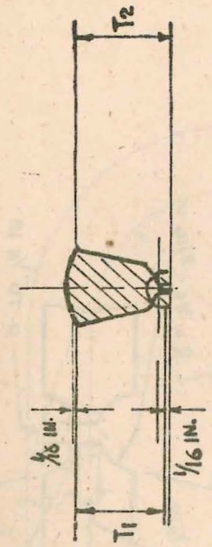

WHERE (T_2-T_1) DOES NOT EXCEED 1/8 IN.

FIG. XII/2

CROSS SEAMS IN ENDPLATES

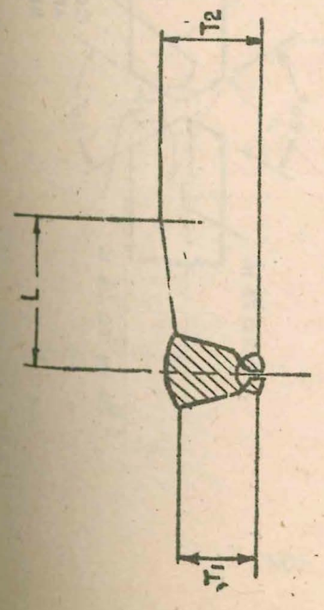

$L=8(T_2-T_1)$ BUT NOT LESS THAN 1½ IN.

FIG. XII/1

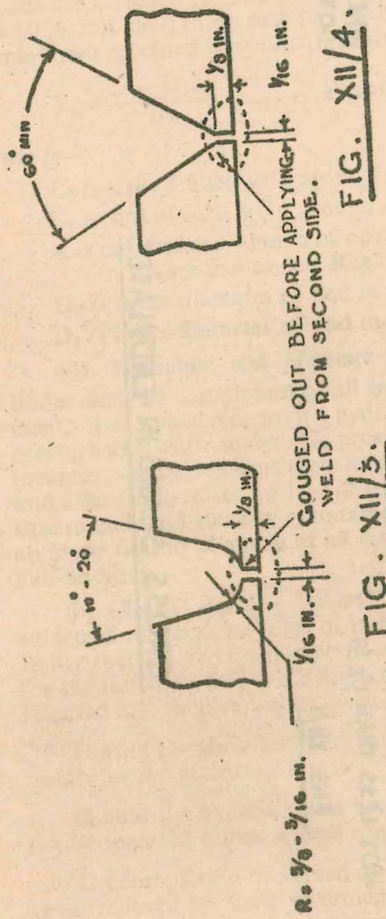

FIG. XII/4.

FIG. XII/3.

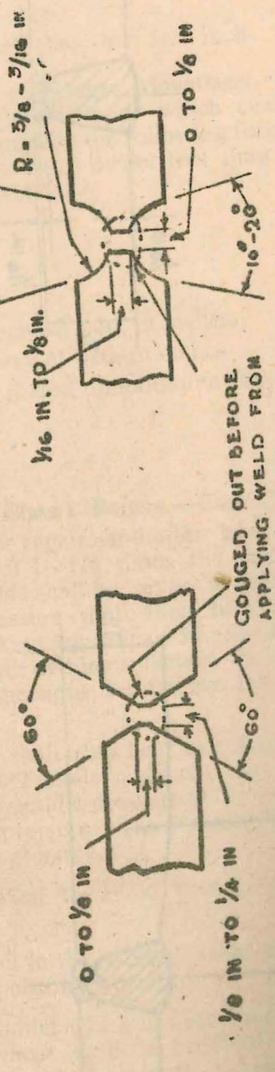

FIG. XII/6.

FIG. XII/5.

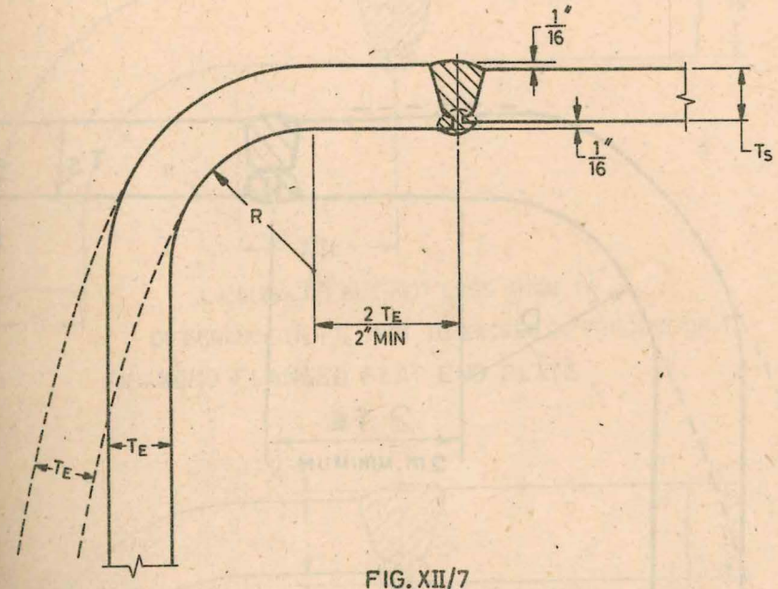

FIG. XII/7

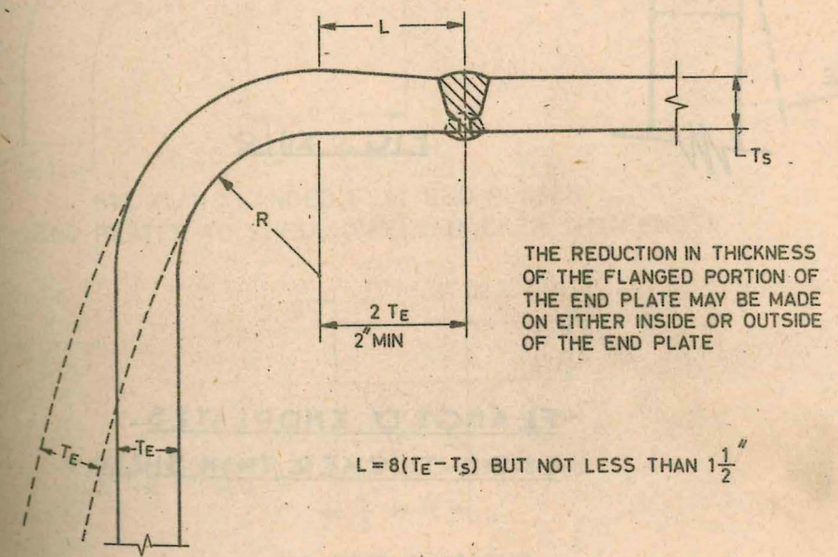

FIG. XII/8

FLANGED END PLATES,
ENDS THICKER THAN SHELL

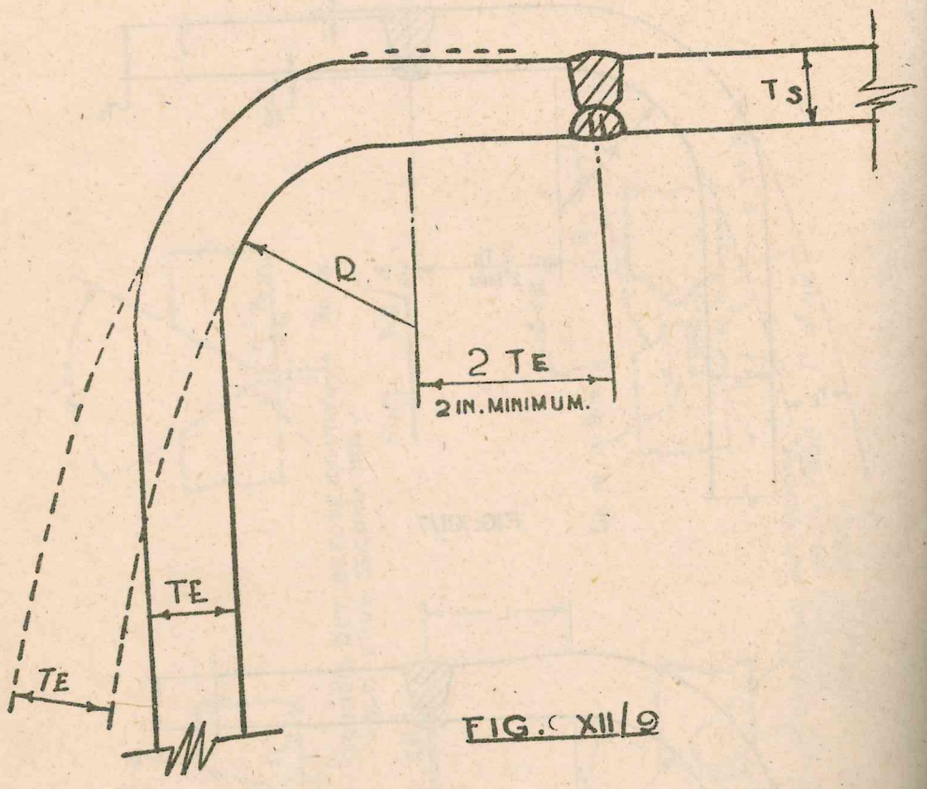

FIG. XII/9

FLANGED ENDPLATES.
ENDS THICKER THAN SHELL

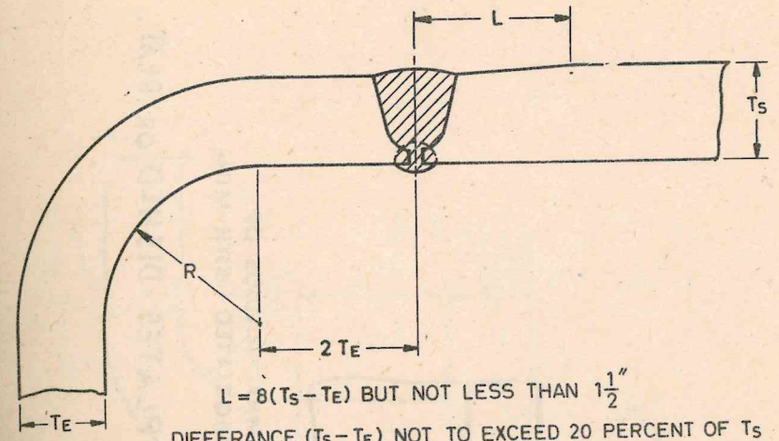

$L = 8(T_S - T_E)$ BUT NOT LESS THAN $1\frac{1}{2}''$

DIFFERANCE $(T_S - T_E)$ NOT TO EXCEED 20 PERCENT OF T_S

FIG. XII/10 FLANGED FLAT END PLATE

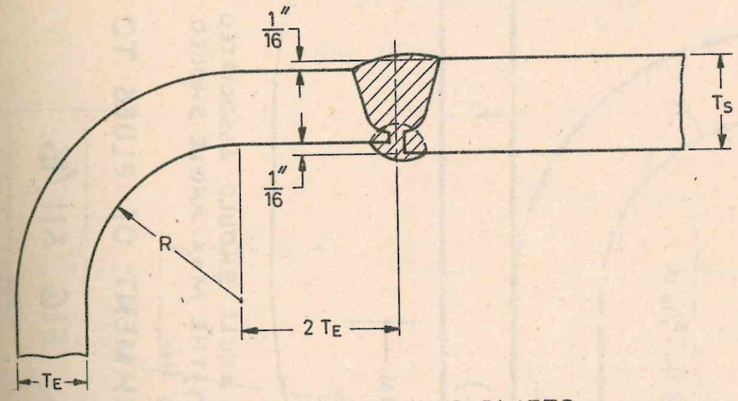

FIG. XII/11 FLANGED FLAT END PLATES
END PLATES TO SHELL (SHELL THICKER THAN ENDS)

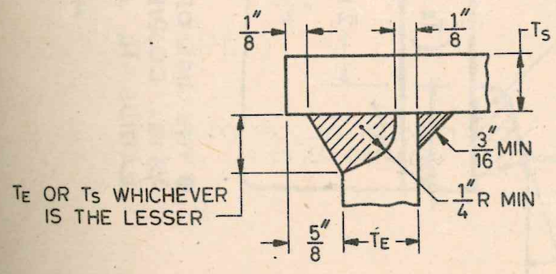

FIG. XII/12 FLAT END

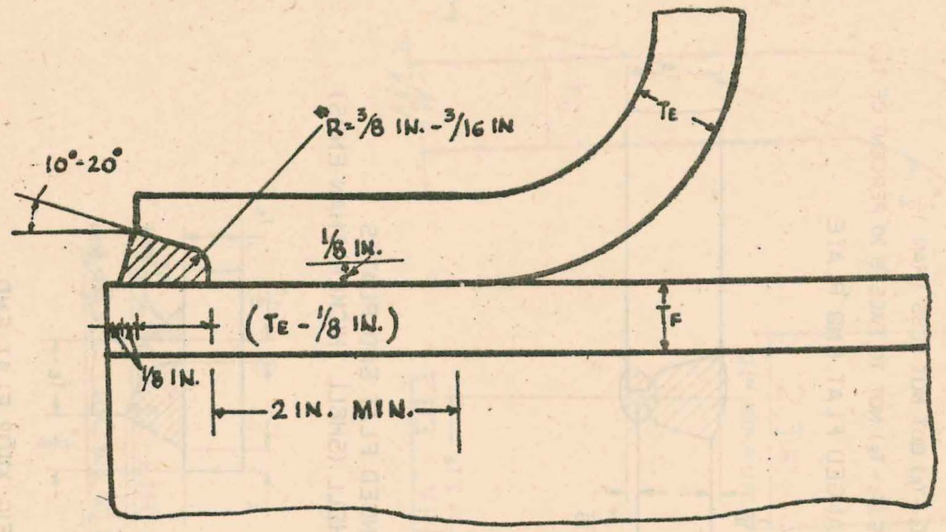

* THE USE OF MIN. ANGLE SHOULD ASSOCIATED WITH MAX. RADIUS OF 3/8 IN. CONVERSELY, THE MAX. ANGLE SHOULD BE ASSOCIATED WITH MIN. RADIUS R OF 3/16 IN.

ATTACHMENT OF FLUES TO END PLATES - DISHED OR FLAT.

FIG. XII/13

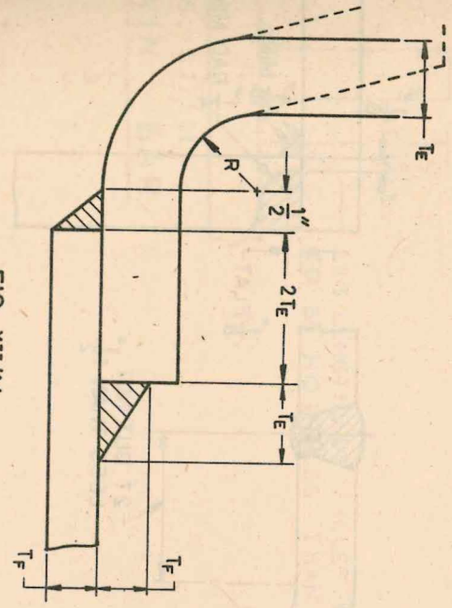

FIG. XII/14

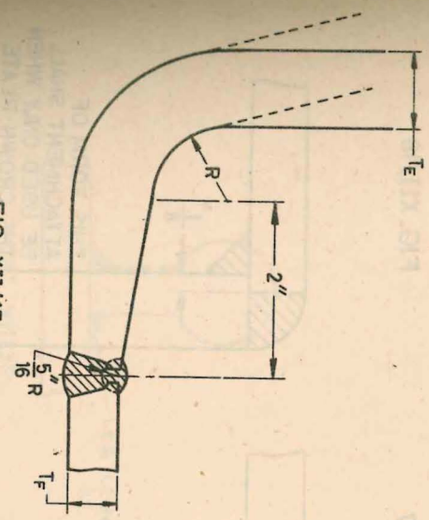

FIG. XII/15

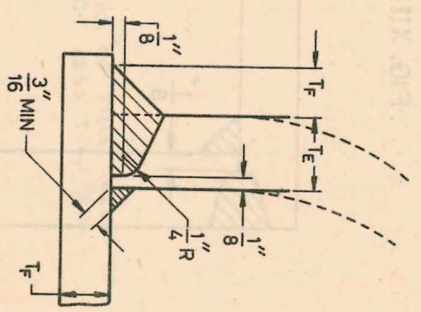

FIG. XII/16

FLUE CONNECTIONS TO END-PLATES (DISHED OR FLAT)

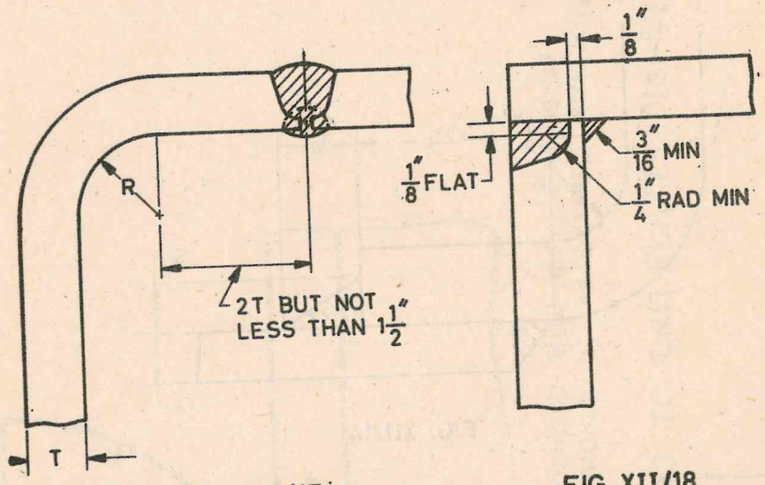

FIG. XII/17

FIG. XII/18

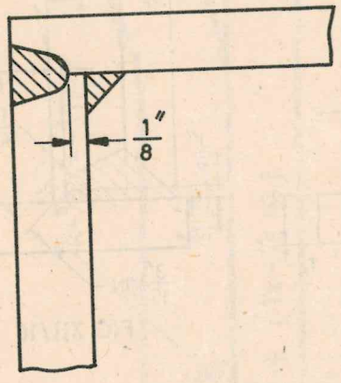

FIG. XII/19

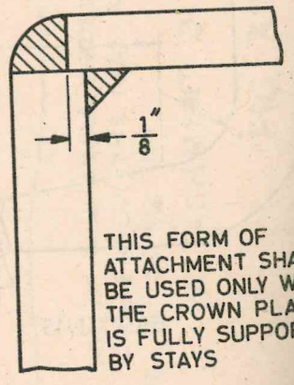

FIG. XII/20

ATTACHMENT OF END PLATES TO COMBUSTION CHAMBER ENDS OR FIREBOX WRAPPER PLATES

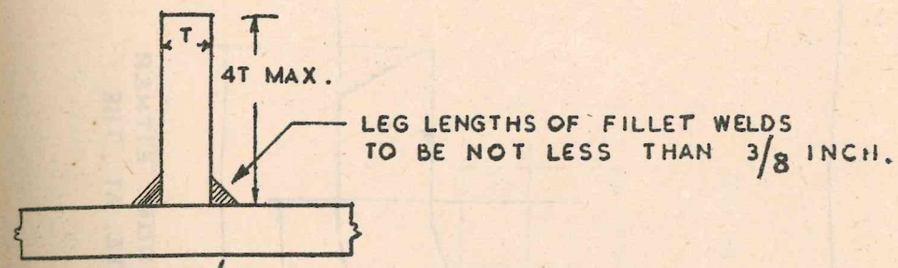

FIG. XII/21

PLAIN BAR

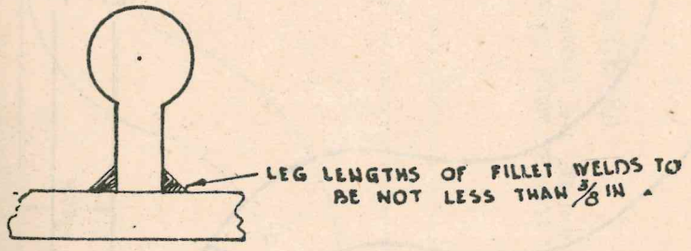

FIG. XII/22

BULB BAR

STIFFENERS FOR HORIZONTAL FLUES.

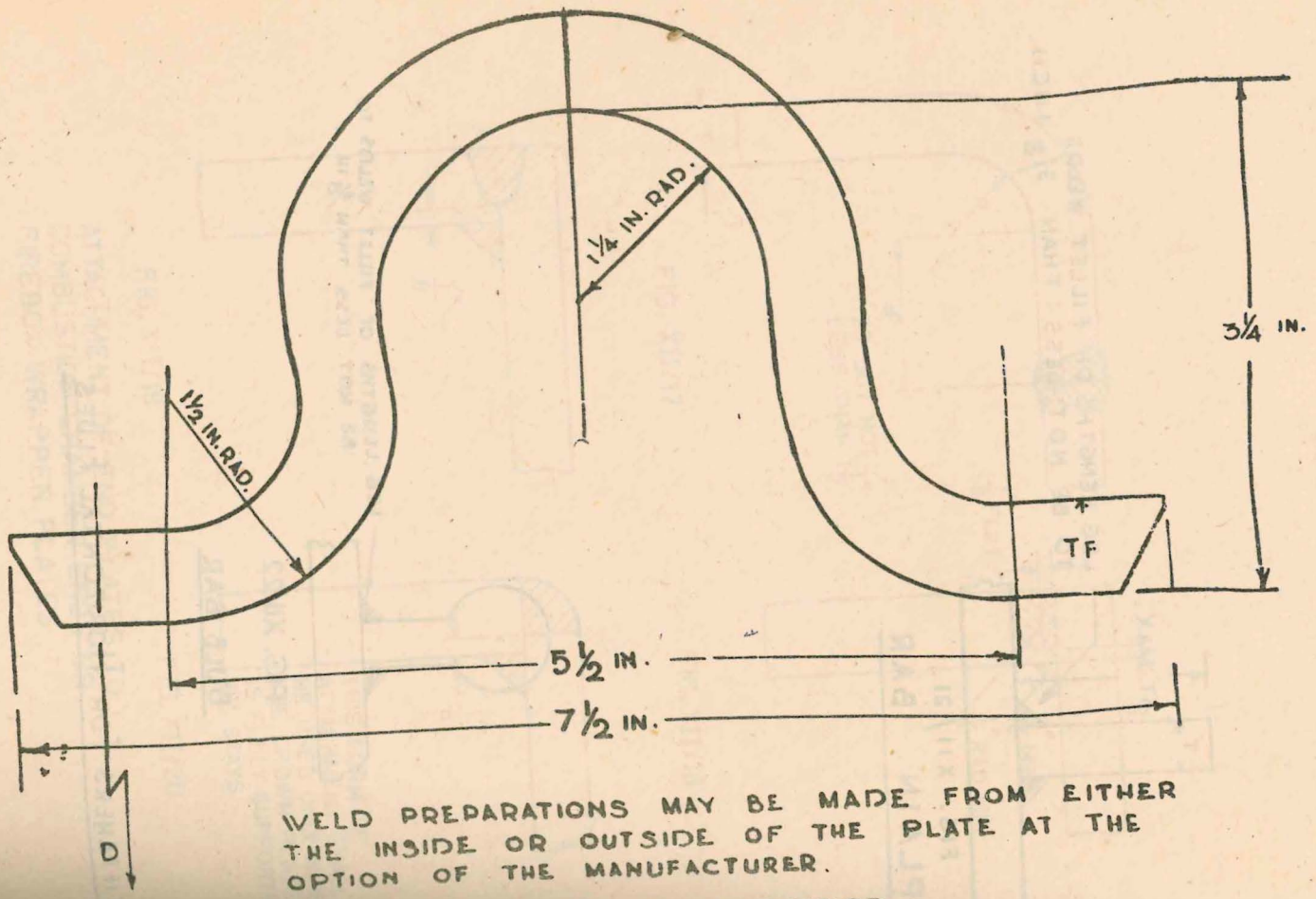

WELD PREPARATIONS MAY BE MADE FROM EITHER THE INSIDE OR OUTSIDE OF THE PLATE AT THE OPTION OF THE MANUFACTURER.

FIG.23 BOWLING HOOP

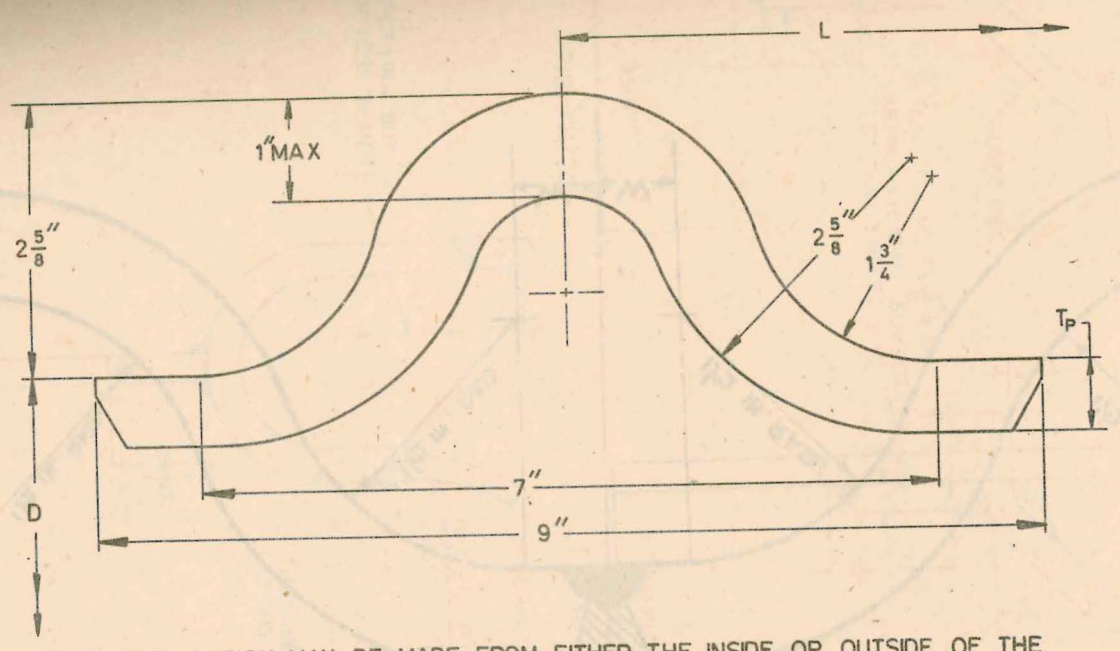

WELD PREPARATION MAY BE MADE FROM EITHER THE INSIDE OR OUTSIDE OF THE PLATE AT THE OPTION OF THE MANUFACTURER.

FIG. XII/24 BOWLING HOOP

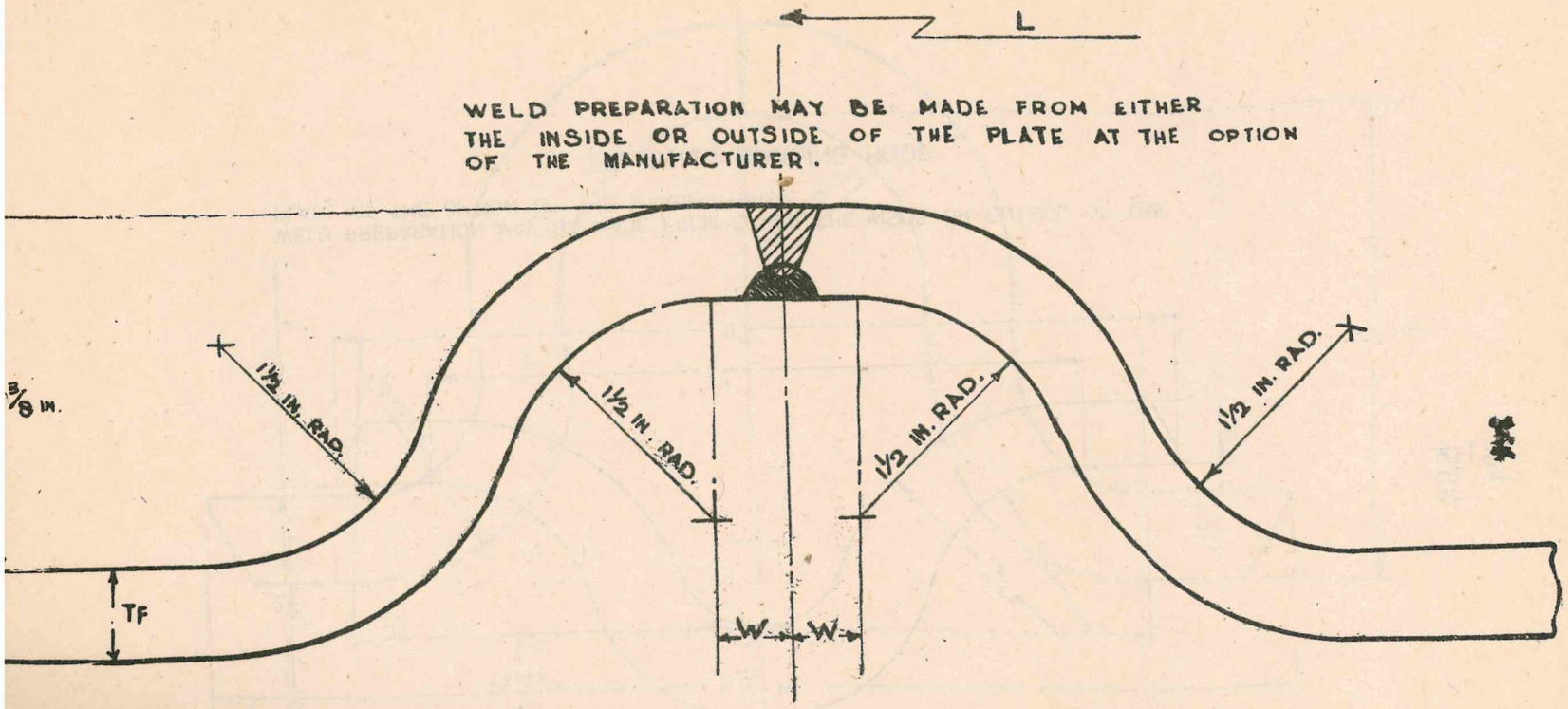

W.T- ⅛ IN BUT NOT LESS THAN ½ IN.

FIG. XII/25 DETAIL OF FLUE JOINT

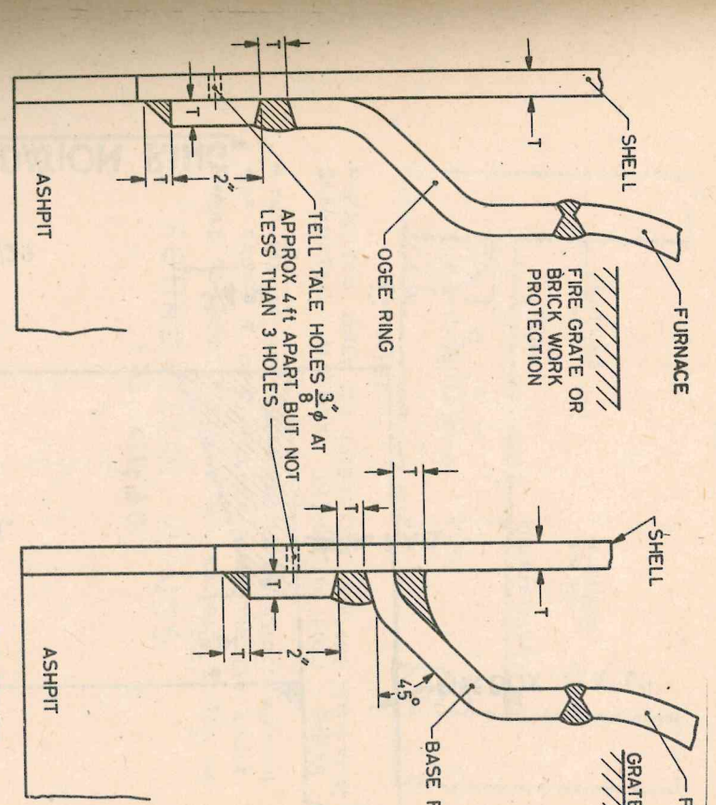

FIG. XII/26

FIG. XII/27

FIG. XII/28

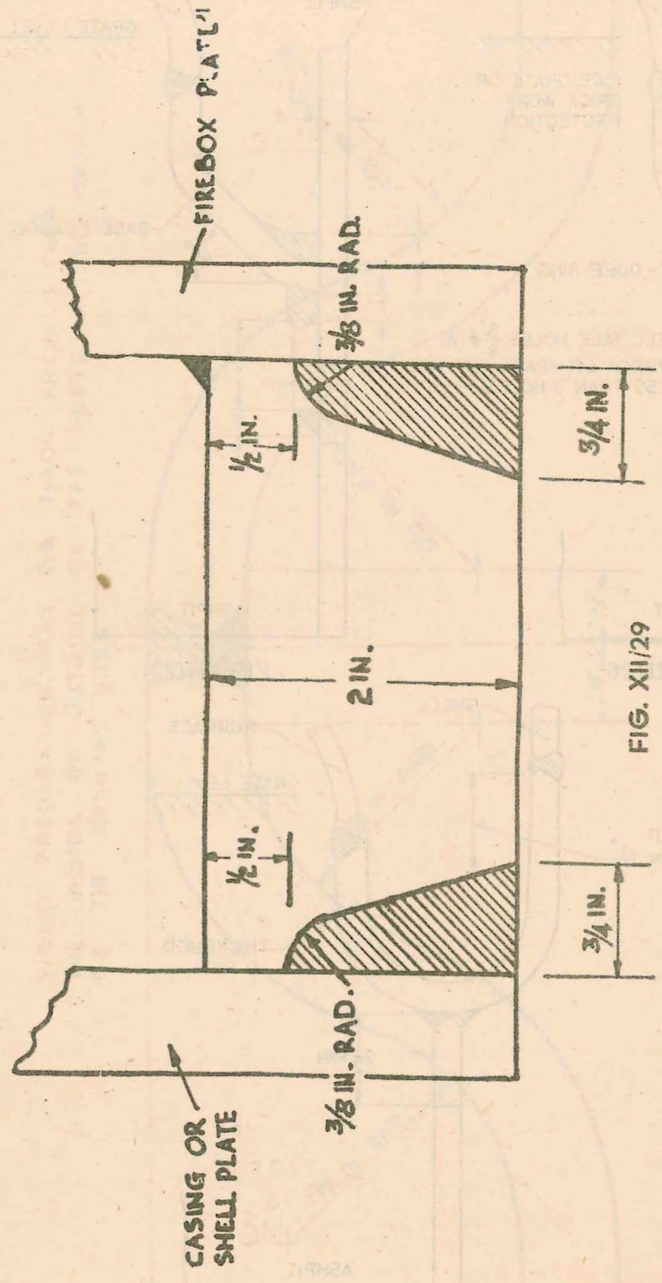

FIG. XII/29

FOUNDATION RING.

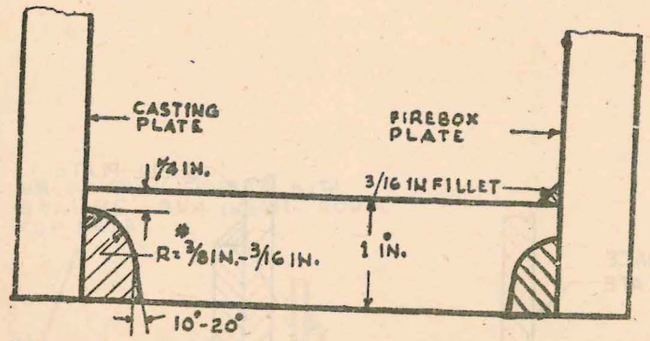

PERMITTED ONLY ON LOCO-TYPE BOILERS WITH FULLY SUPPORTED FIREBOX SHOWN IN FIG. XII/78

* THE USE OF MIN. ANGLE SHOULD BE ASSOCIATED WITH MAX RADIUS R. OF 3/8 IN. CONVERSELY, THE MAX. ANGLE SHOULD BE ASSOCIATED WITH MIN. RADIUS R. OF 3/16 IN.

FOUNDATION RINGS.
FIG. XII/30

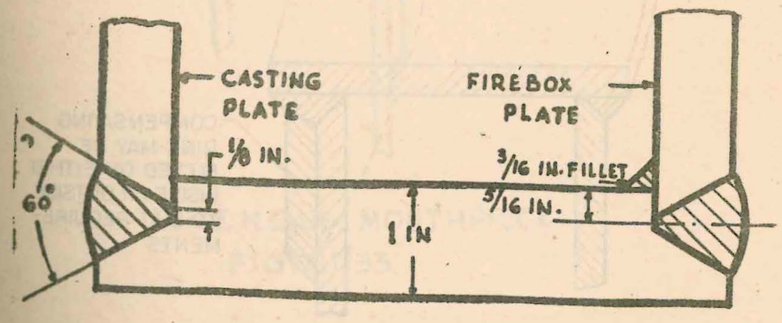

PERMITTED ONLY ON LOCO-TYPE BOILERS WITH FULLY SUPPORTED FIREBOX AS SHOWN IN FIG. XII/78

FOUNDATION RINGS
FIG. XII/31

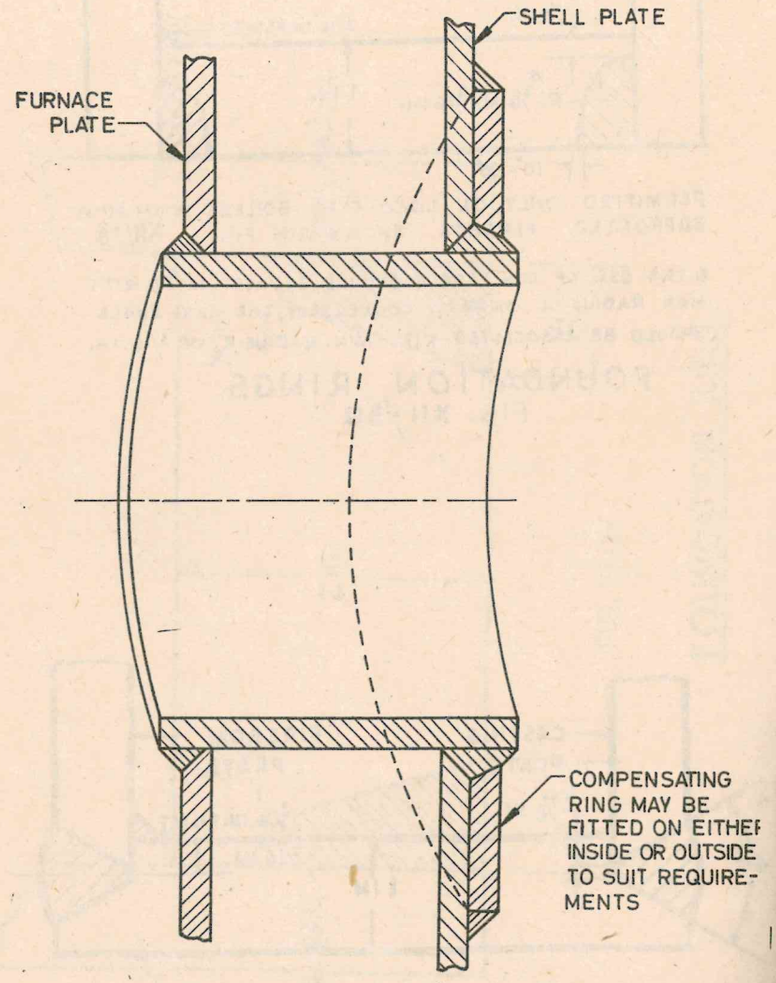

FIG. XII/32 FIREHOLE MOUTHPIECE

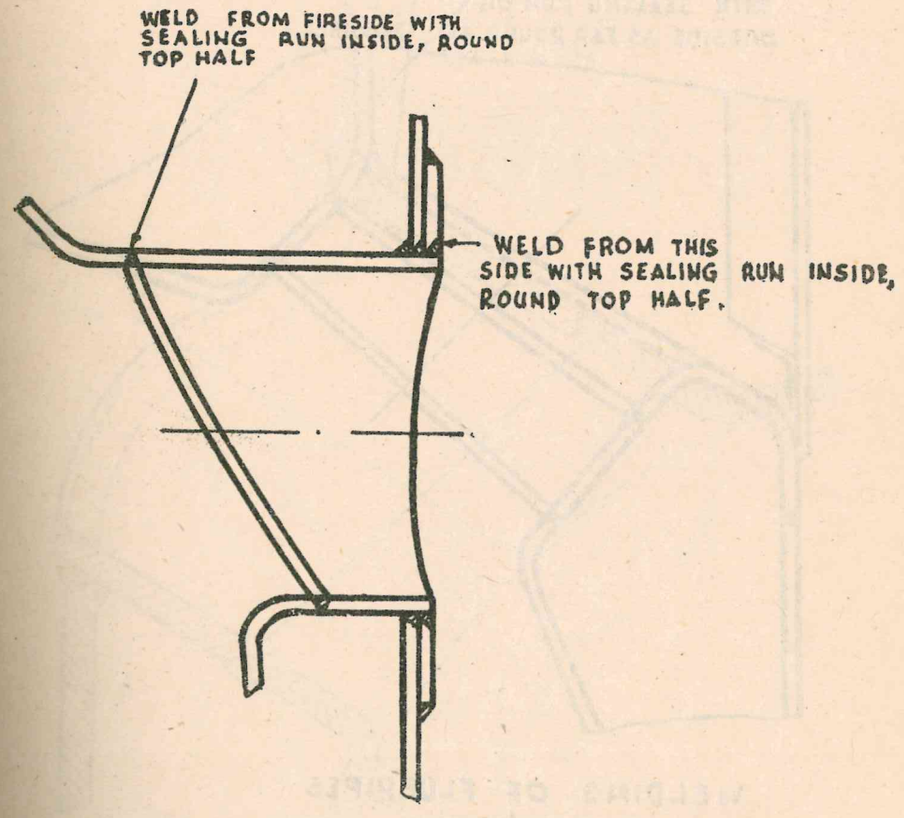

FIREHOLE MOUTHPIECE
FIG. XII/33

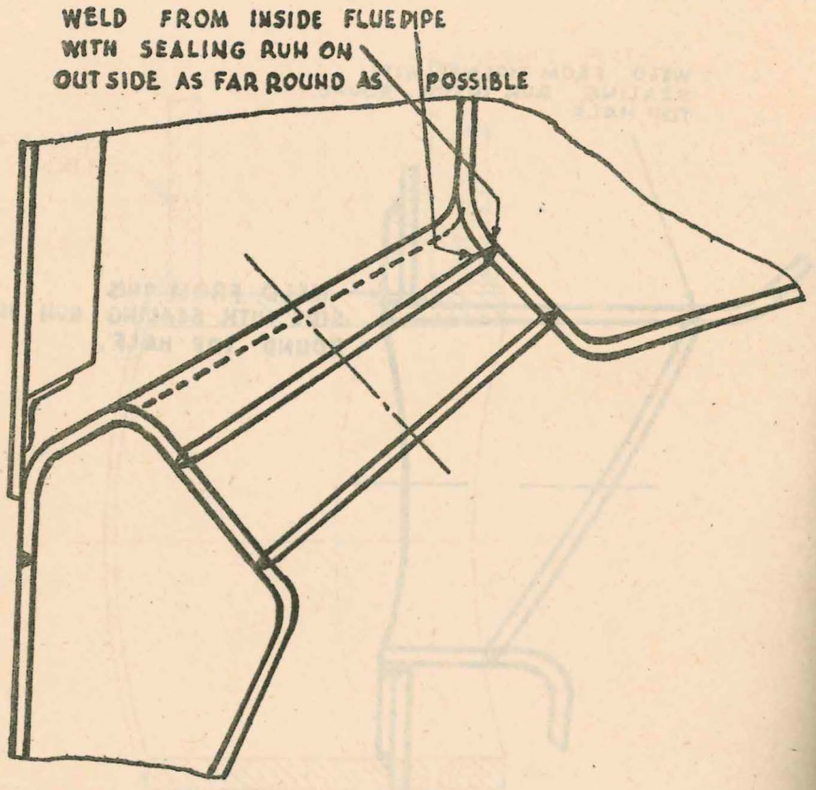

WELDING OF FLUEPIPES
FIG. XII/35

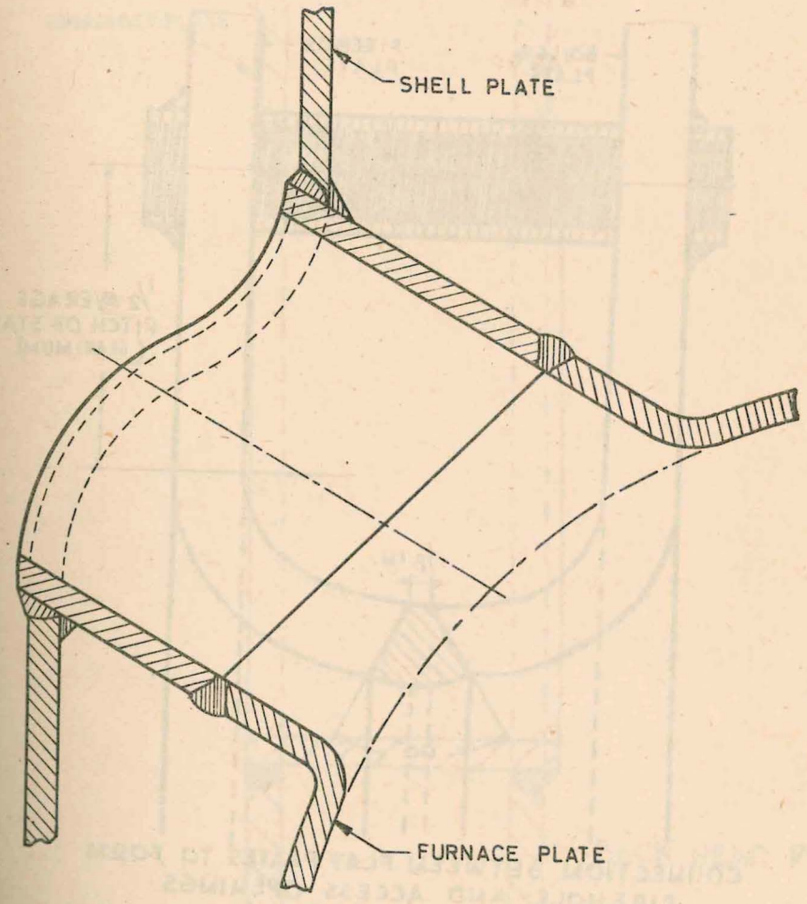

FIG. XII / 36 THROAT - PIECE

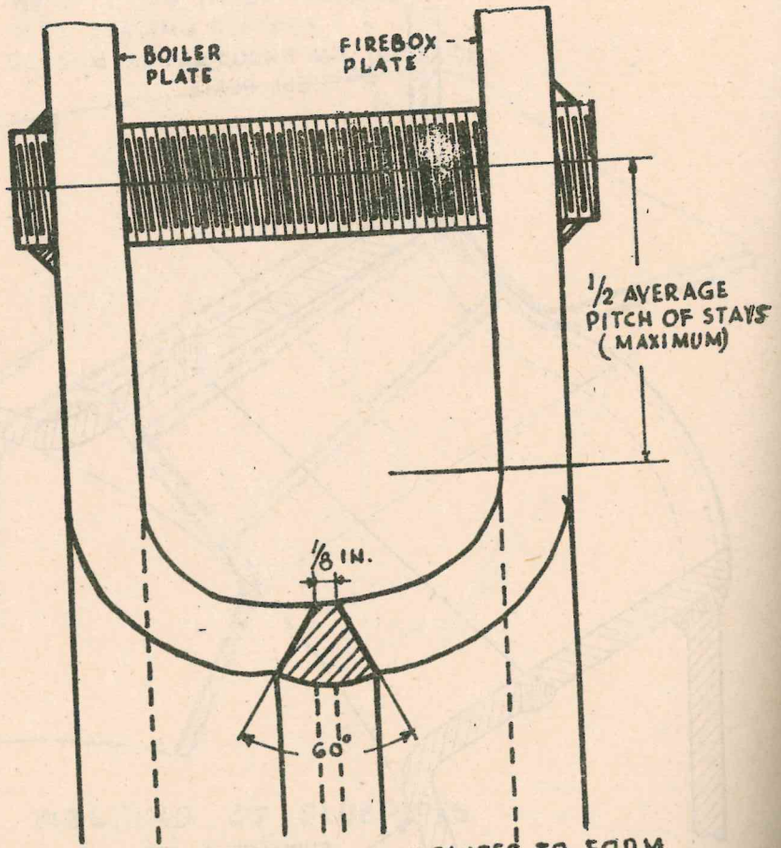

CONNECTION BETWEEN FLAT PLATES TO FORM FIREHOLE AND ACCESS OPENINGS

FIG. XII/37

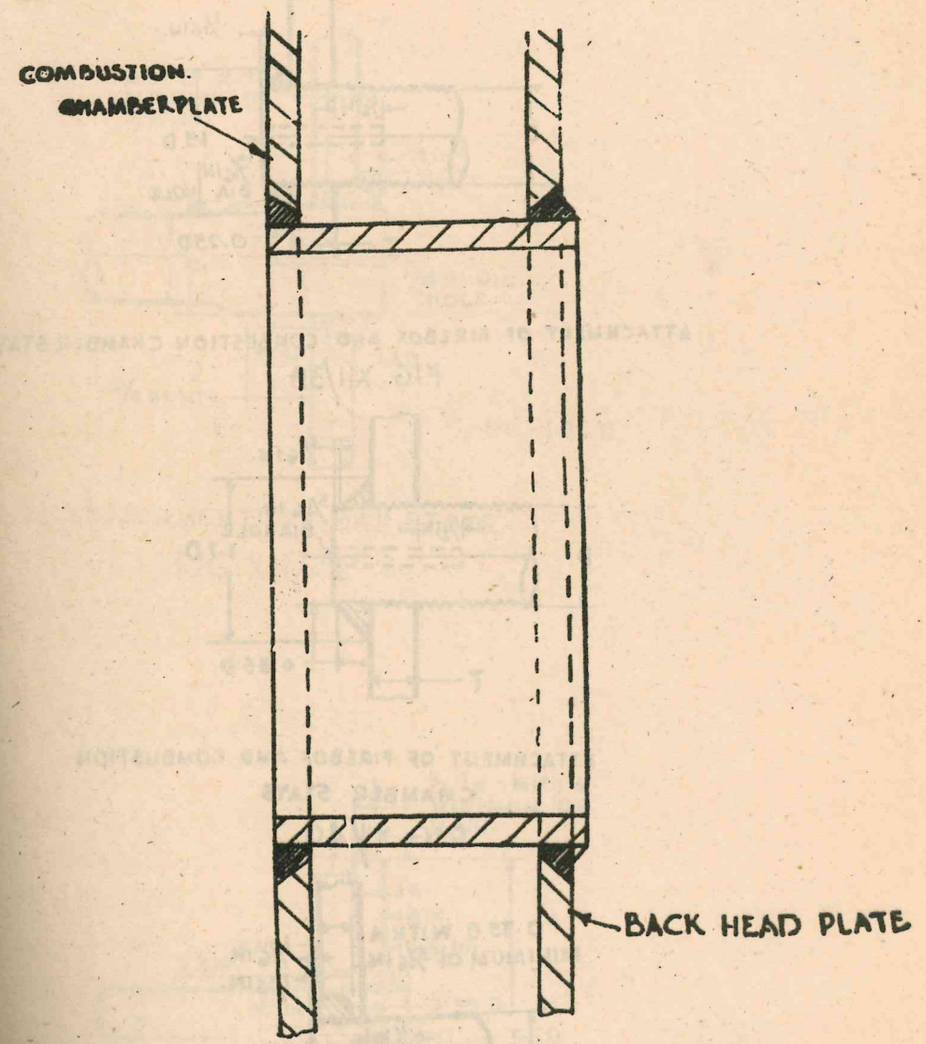

FIG. XII/38 ACCESS OPENING FOR WET-BACK BOILERS

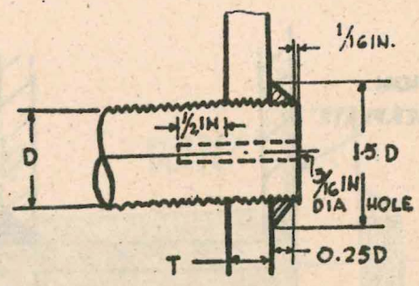

ATTACHMENT OF FIREBOX AND COMBUSTION CHAMBER STAYS

FIG. XII/39

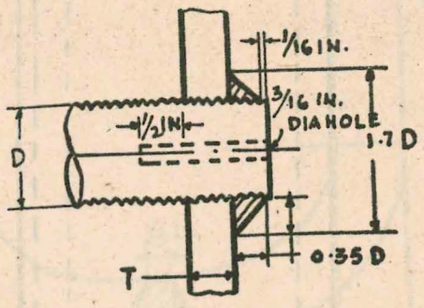

ATTACHMENT OF FIREBOX AND COMBUSTION CHAMBER STAYS

FIG. XII/40

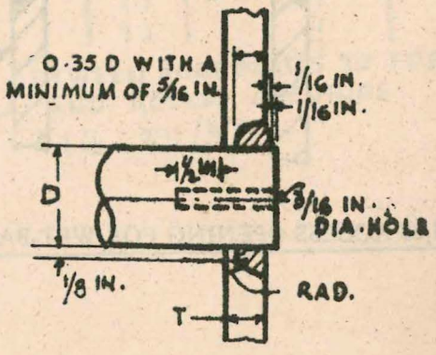

ATTACHMENT OF FIREBOX AND COMBUSTION CHAMBER STAYS.

FIG. XII/41

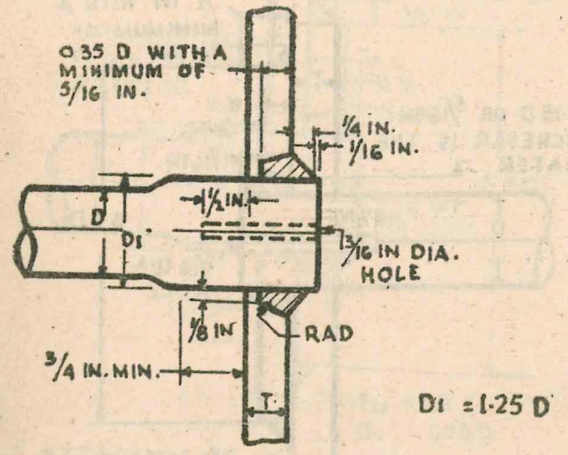

ATTACHMENT OF BAR STAYS

FIG. XII/42.

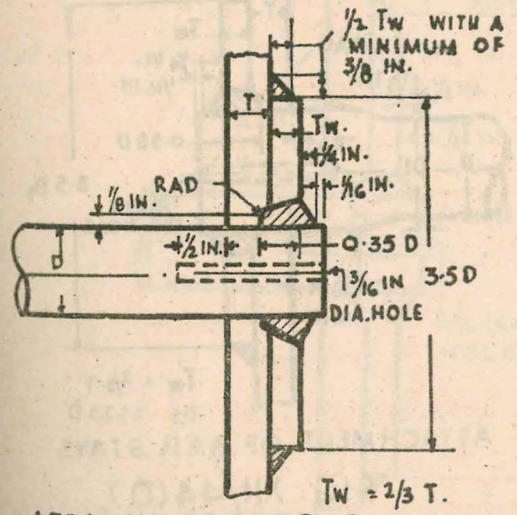

ATTACHMENT OF BAR STAYS

FIG. XII/43(a)

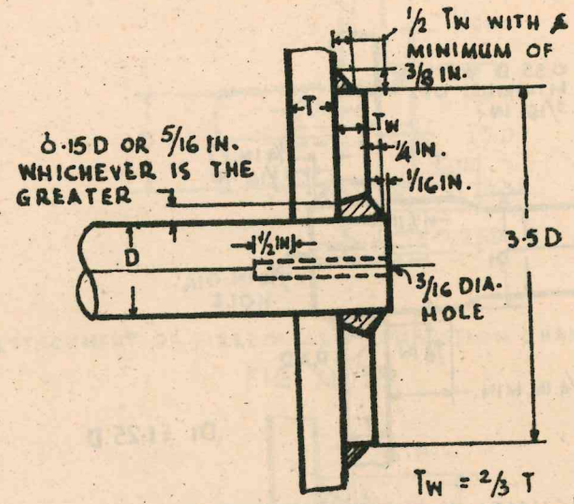

ATTACHMENT OF BAR STAYS

FIG. XII/43(b)

WHERE Tw IS LESS THAN 0·35 D, THE FORM OF CONSTRUCTION SHOWN IN (a) SHALL BE USED

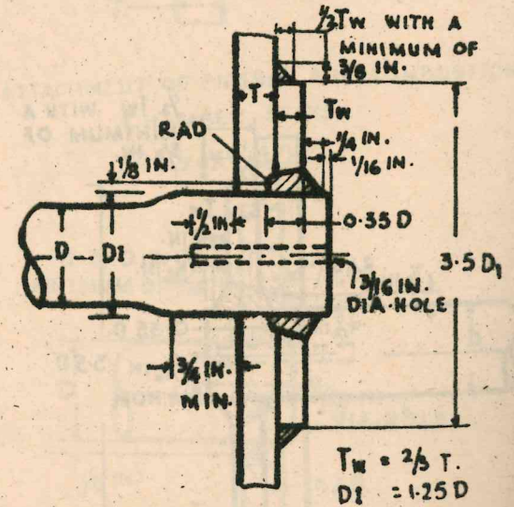

ATTACHMENT OF BAR STAYS

FIG. XII/44(a)

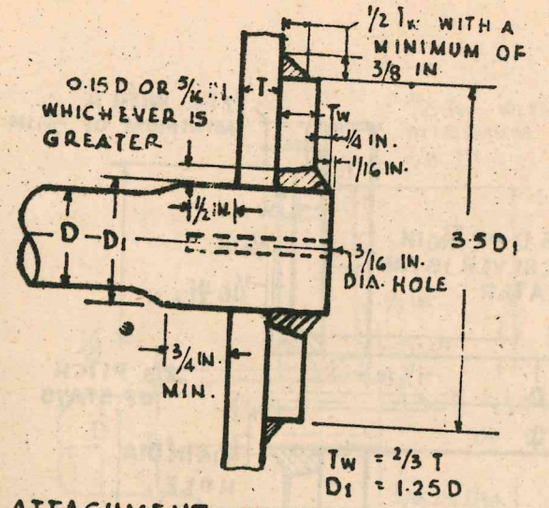

ATTACHMENT OF BAR STAYS

FIG. XII/44 (b)

WHERE Tw IS LESS THAN 0·35D THE FORM OF CONSTRUCTION SHOWN IN (a) SHALL BE USED

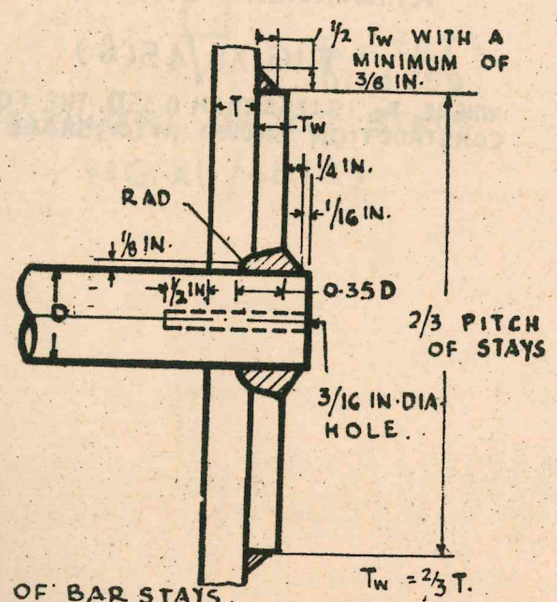

ATTACHMENT OF BAR STAYS.

FIG. XII/45(a)

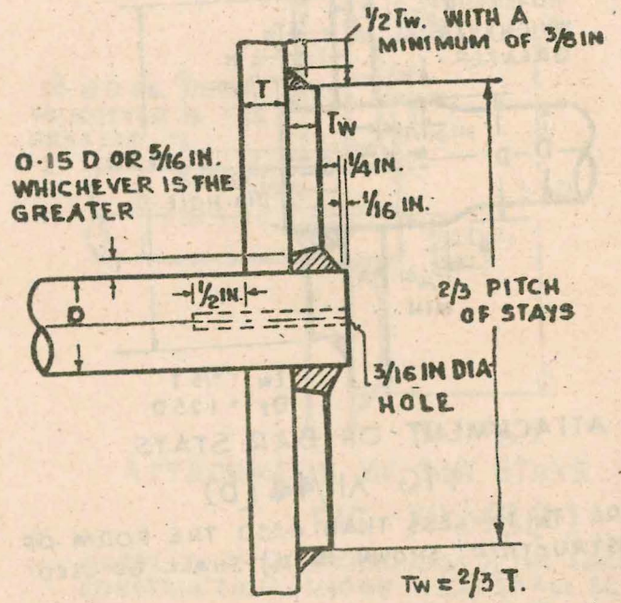

ATTACHMENT OF BAR STAYS

FIG. XII/45(b)

WHERE Tw IS LESS THAN 0·35D, THE FORM OF CONSTRUCTION SHOWN IN (a) SHALL BE USED

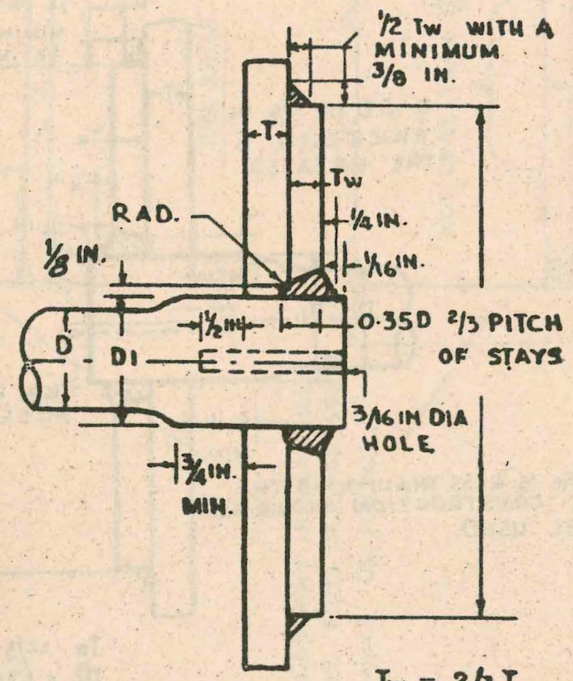

ATTACHMENT OF BAR STAYS.

FIG. XII/46(a)

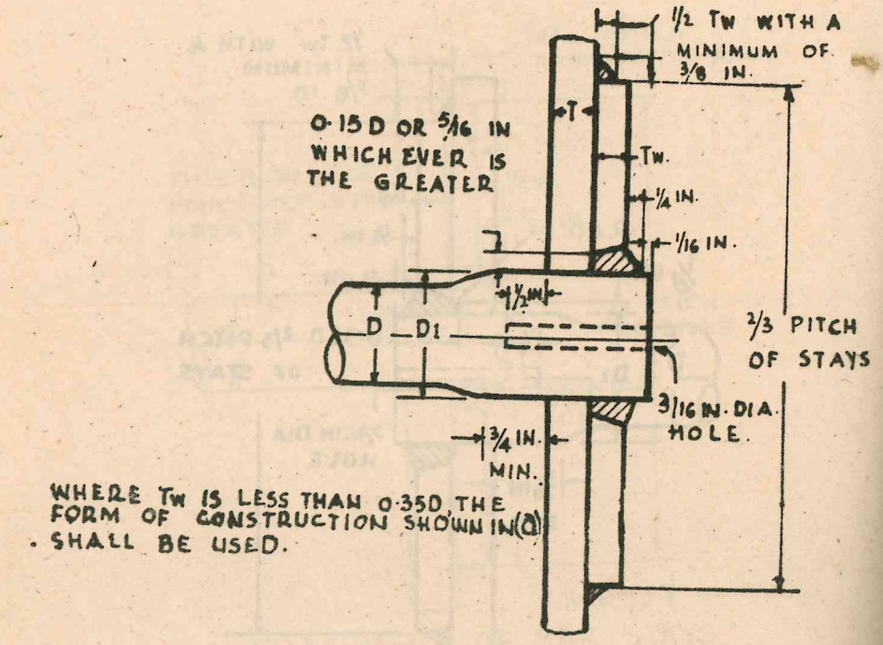

Tw. = 2/3 T.
D1 = 1·25 D

ATTACHMENT OF BAR STAYS

FIG. XII/46 (b)

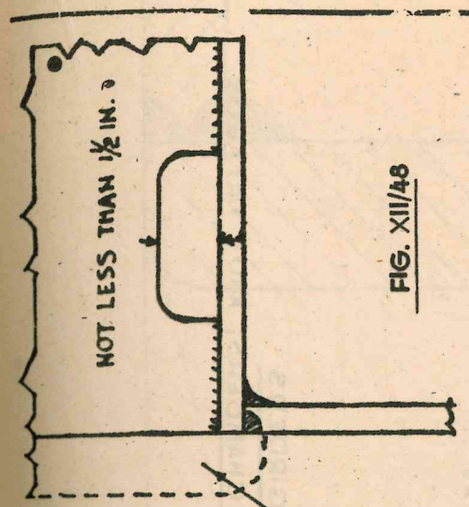

FIG. XII/48

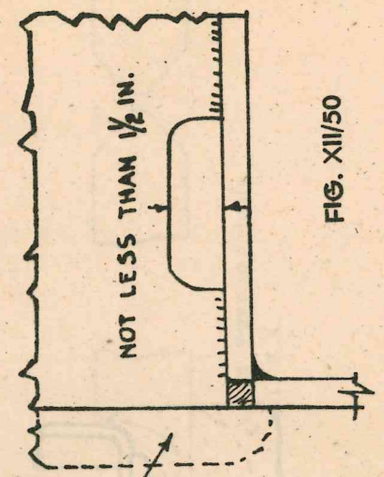

FIG. XII/50

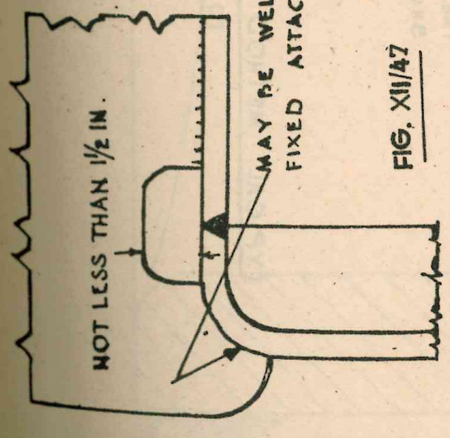

FIG. XII/47

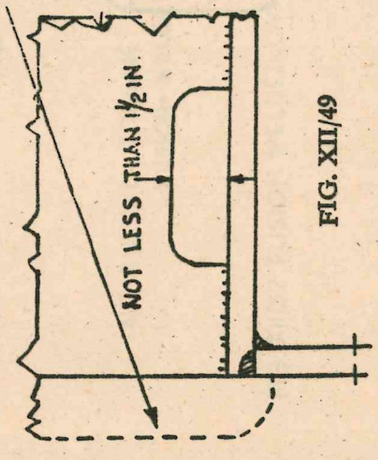

FIG. XII/49

TYPICAL METHODS OF FITTING WELDED GIRDERS TO WELDED COMBUSTION CHAMBERS AND FIREBOXES

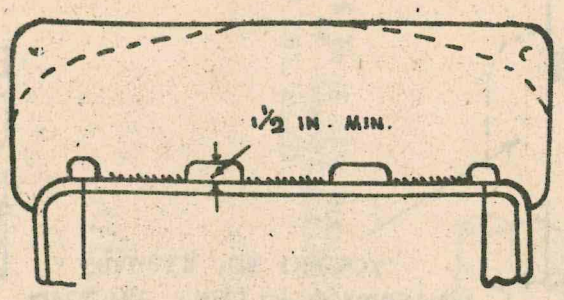

GIRDERS MAY BE SHAPED TO EITHER THE FULL OR DOTTED LINES AS SHOWN ABOVE.

FIG. XII/51

TYPICAL METHOD OF FITTING WELDED GIRDERS TO WELDED COMBUSTION CHAMBERS, AND FIREBOXES.

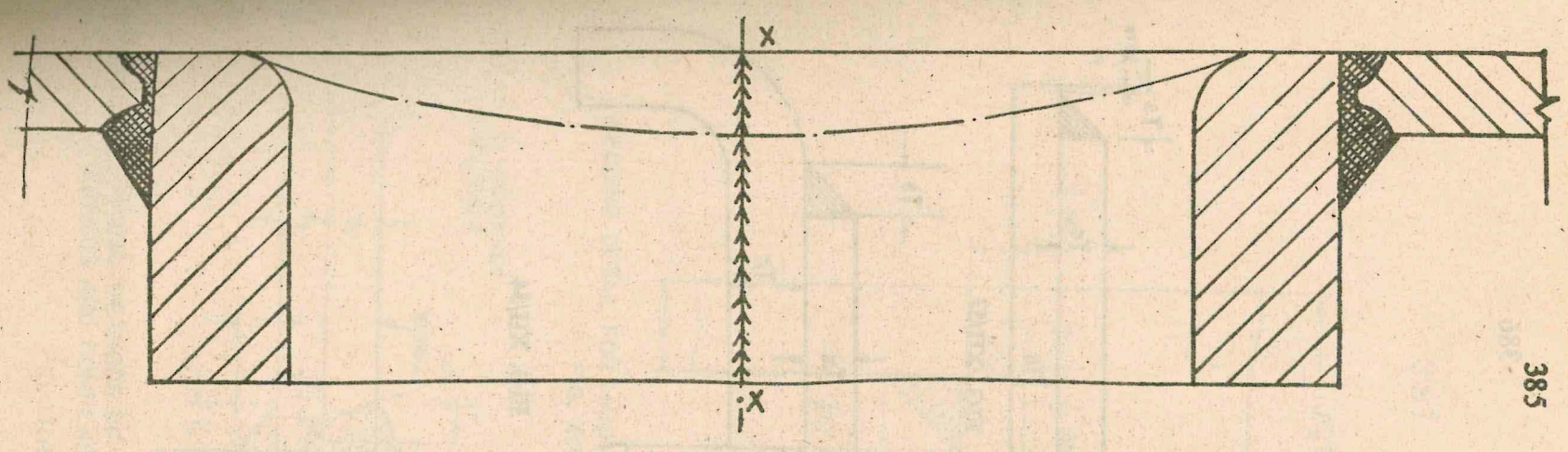

ALTERNATIVE FORGING MADE IN HALVES AND FUSION-WELDED ALONG X.X.

FIG. XII/52 FUSION WELDED OVAL MANHOLE FRAME

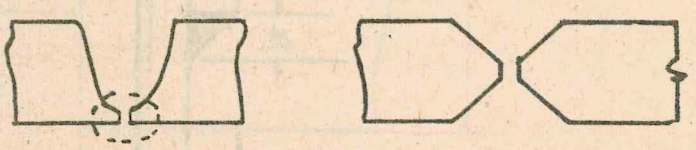

WELD PREPARATIONS AT X.X.

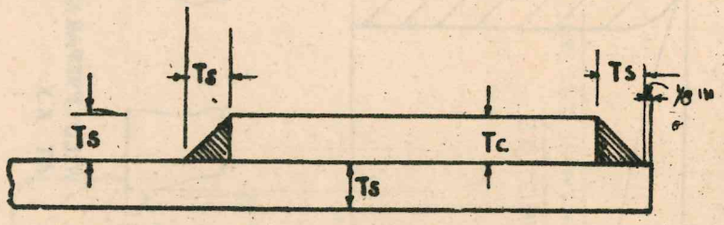

FIG. XII/53

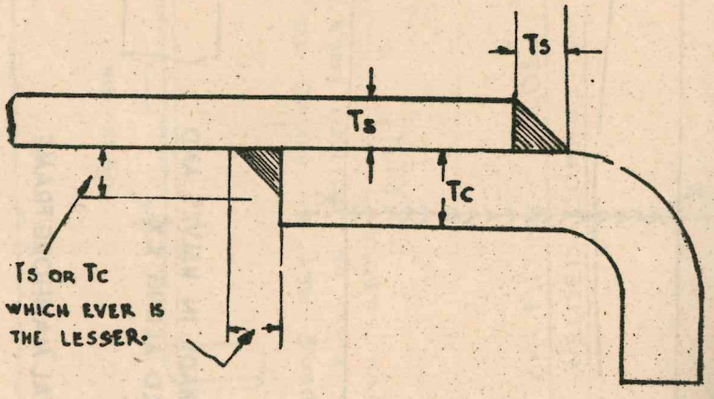

FIG. XII/54

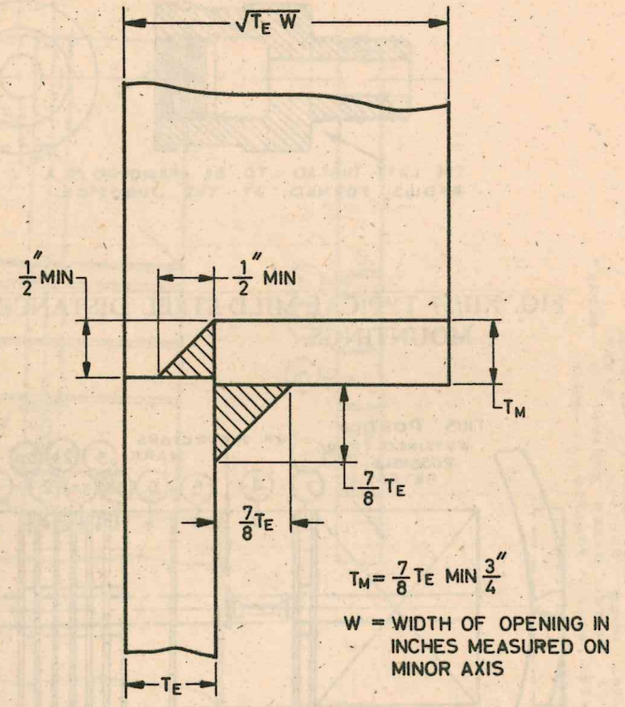

WELDING DETAIL FOR MANHOLE IN FLAT END PLATE
FIG. XII/55

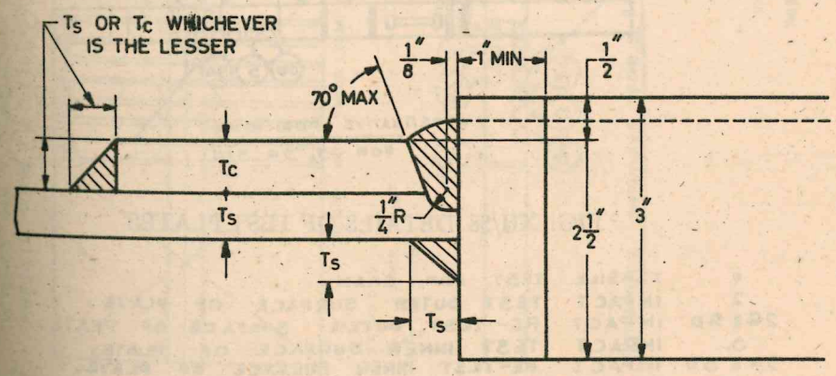

TYPICAL METHODS OF WELDING MANHOLE FRAMES AND COMPENSATING PLATES
FIG. XII/56

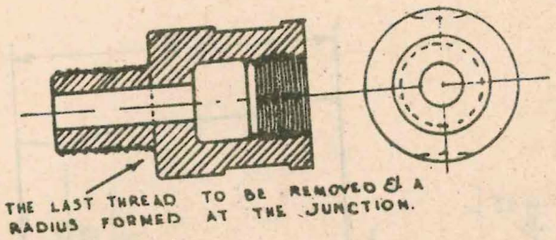

FIG. XII/57 TYPICAL MILD STEEL DISTANCE PIECE FOR MOUNTINGS.

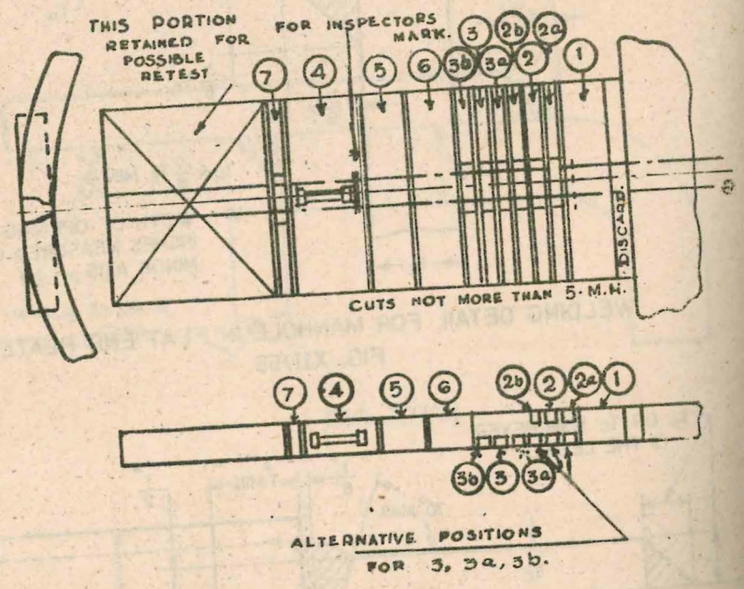

FIG. XII/58 DETAILS OF TEST PLATES

1 TENSILE TEST FOR SEAM.
2 IMPACT TEST OUTER SURFACE OF PLATE.
2a & 2b IMPACT RE-TEST OUTER SURFACE OF PLATE.
3 IMPACT TEST INNER SURFACE OF PLATE.
3a & 3b IMPACT RE-TEST INNER SURFACE OF PLATE.
4 TENSILE TEST FOR ALL-WELD-METAL.
5 NORMAL BEND TEST-OUTER SURFACE IN TENSION.
6 REVERSE BEND TEST-INNER SURFACE IN TENSION.
7, 9 MICRO AND MACRO TEST.

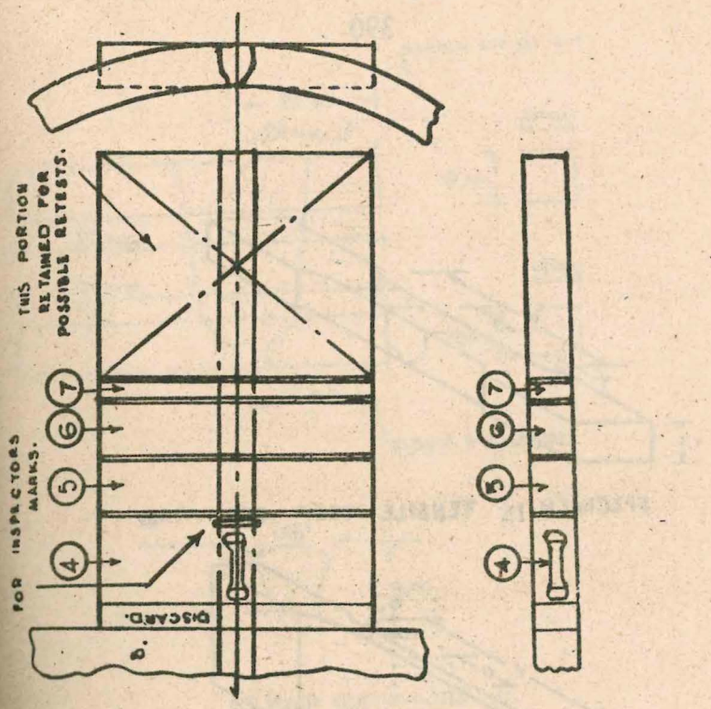

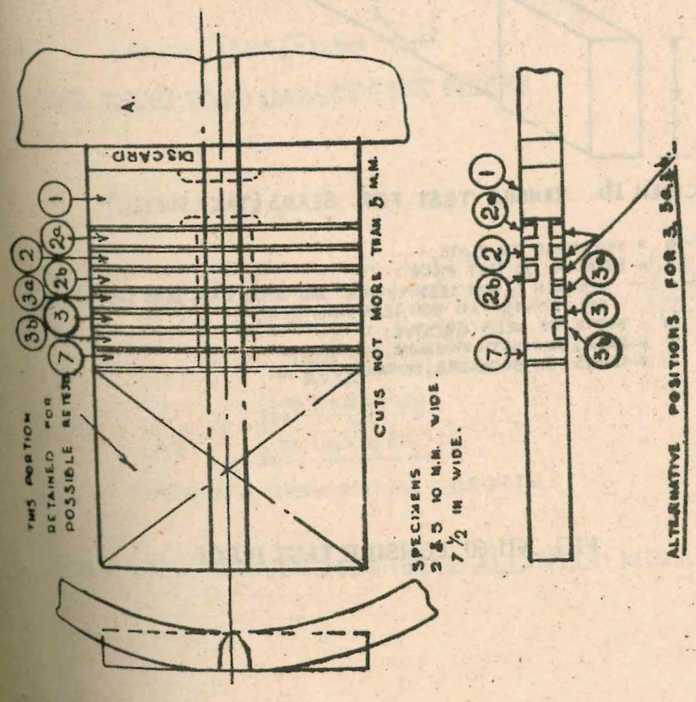

FIG. XII/59

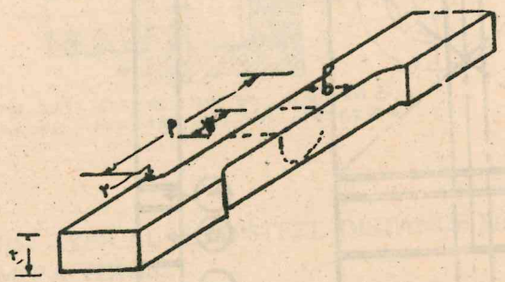

SPECIMEN 1a TENSILE TEST FOR SEAM

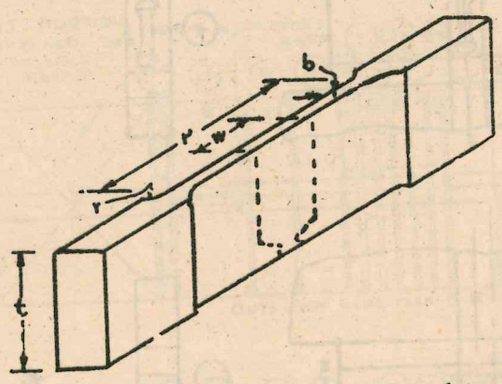

SPECIMEN 1b TENSILE TEST FOR SEAMS (THICK PLATES)

t = THICKNESS OF PLATE.
b = BREADTH OF TEST PIECE.
SPECIMEN 1a NOT LESS THAN t AND IN NO CASE LESS THAN 1½ IN.
SPECIMEN 1b t x b NOT LESS THAN 1½ IN.
W = WIDTH OF WELD GROOVE.
P = PARALLEL LENGTH, MINIMUM = 3 x W.
r = RADIUS AT SHOULDER, MINIMUM = 1½ IN.

FIG. XII/60 TENSILE TEST PIECE

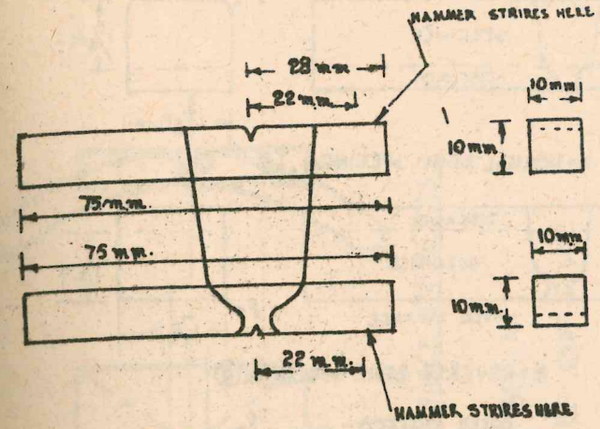

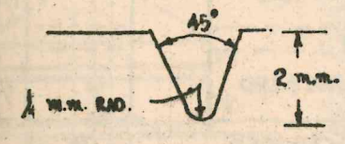

ENLARGED VIEW OF NOTCH.

SPECIMENS (2) AND (3) IMPACT TESTS

FIG. XII/62 IZOD IMPACT TEST PIECES

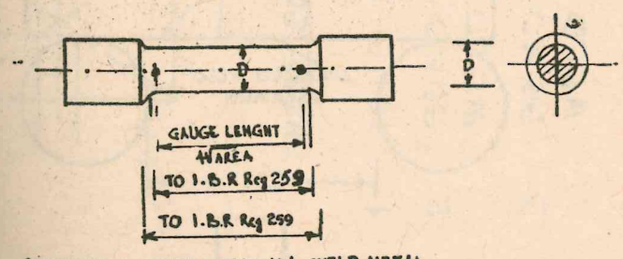

SPECIMEN 4 TENSILE TEST ALL WELD METAL

FIG. XII/63 TENSILE TEST PIECE ALL-WELD METAL

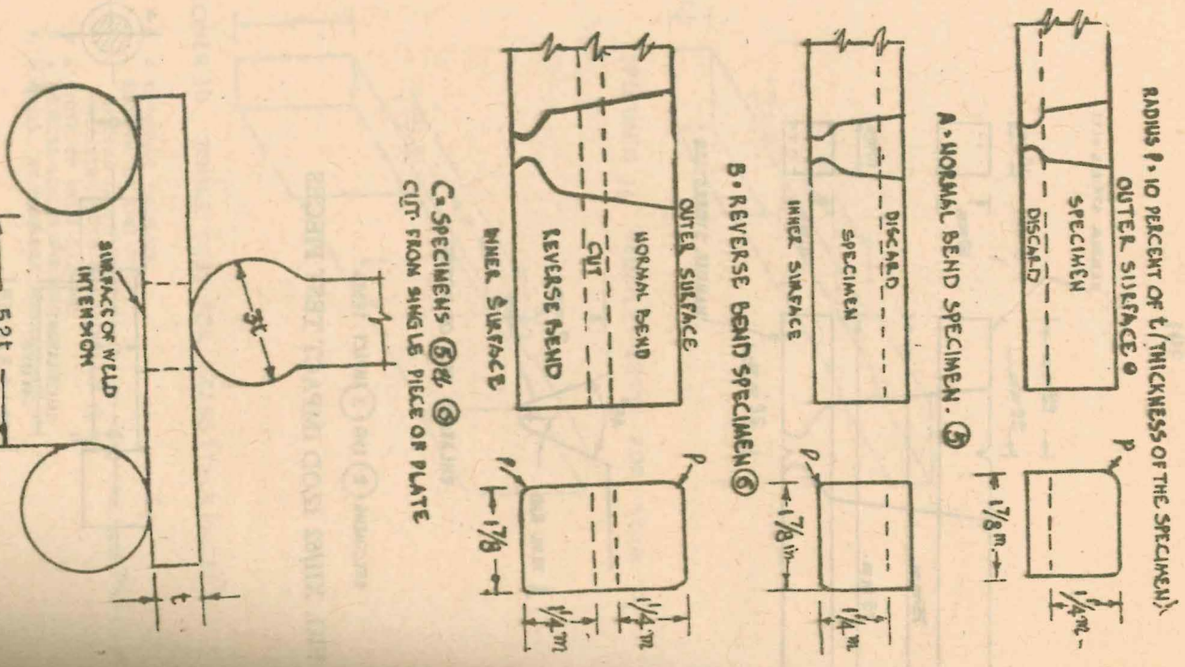

FIG. XII/64 BEND TEST

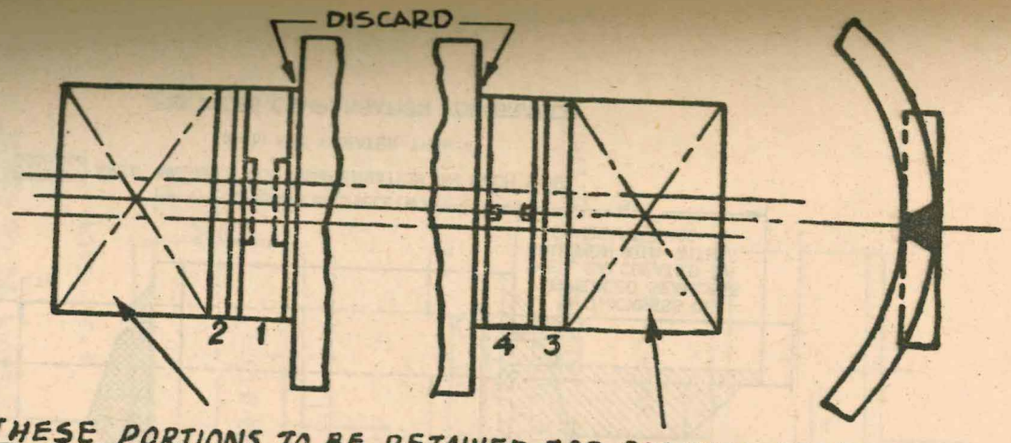

1. TENSILE TEST FOR WELDED SEAM.
2. BEND TEST— OUTER SURFACE OF THE WELD IN TENSION.
3. BEND TEST— INNER SURFACE OF THE WELD IN TENSION.
4. NICK BREAK TEST.

FIG. XII/65. DETAILS OF TEST PLATES.

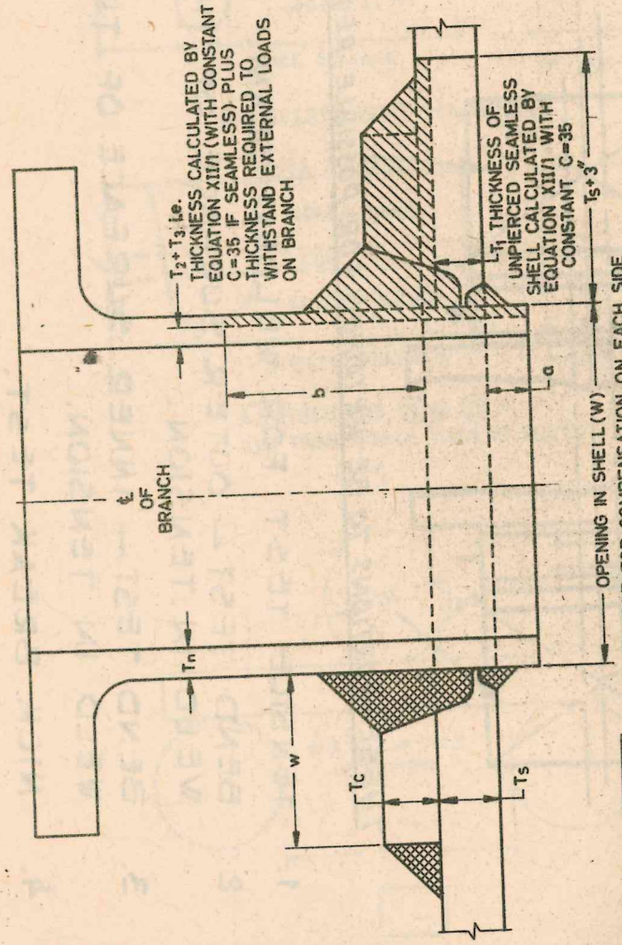

FIG. XII/66 COMPENSATION FOR BRANCH

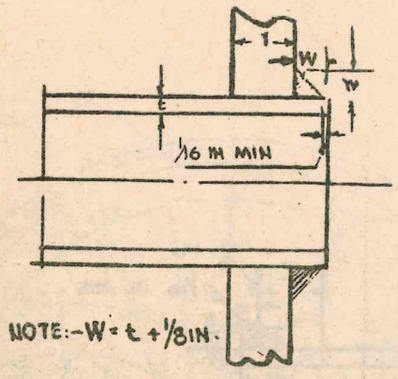

TUBES TO BE LIGHTLY EXPANDED INTO THE PLATE BEFORE WELDING

C = 64 COLD END
C = 56 HOT END

FIG. X11/67

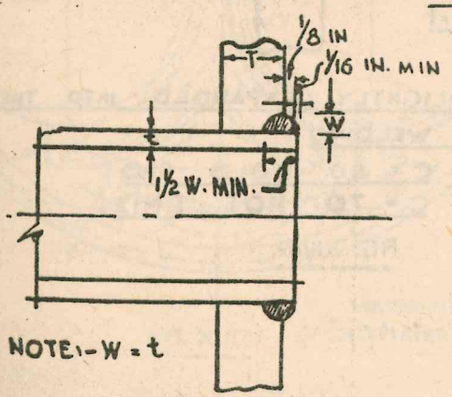

TUBES TO BE LIGHTLY EXPANDED INTO THE PLATE BEFORE WELDING.

C = 64 COLD END
C = 56 HOT END

FIG. X11/68

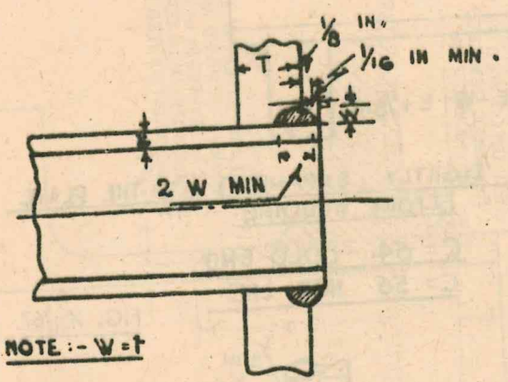

TUBES TO BE LIGHTLY EXPANDED INTO THE PLATE BEFORE WELDING

C = 80 COLD END

C = 70 HOT END.

FIG. XII/69.

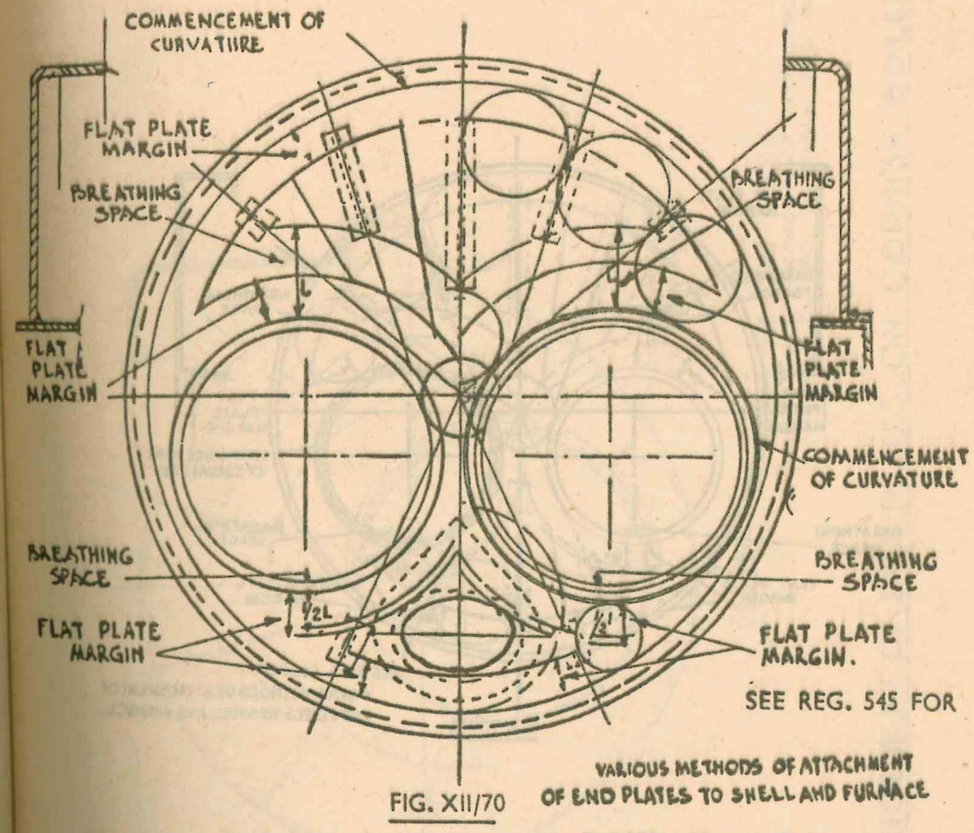

FIG. XII/70

TYPICAL ARRANGEMENT OF END PLATES ON LANCASHIRE BOILERS.

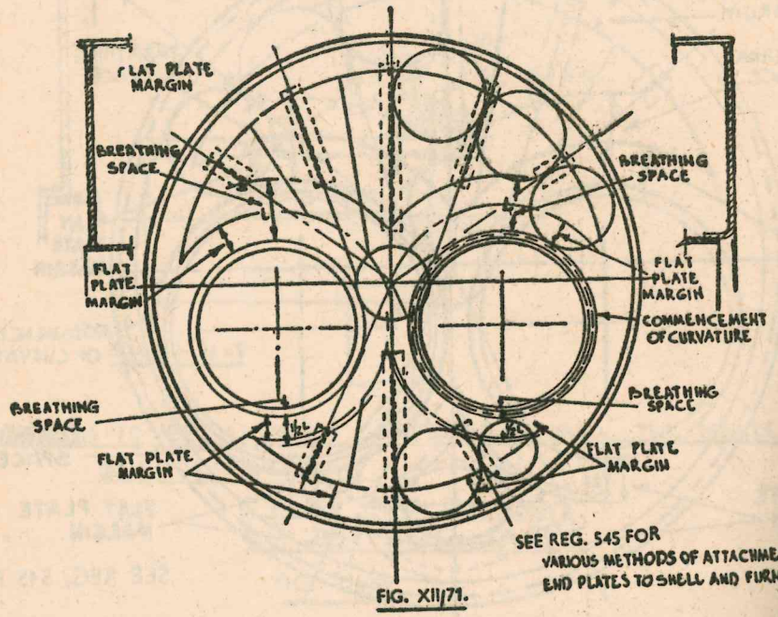

FIG. XII/71.

TYPICAL ARRANGEMENT OF END PLATES ON LANCASHIRE BOILERS.

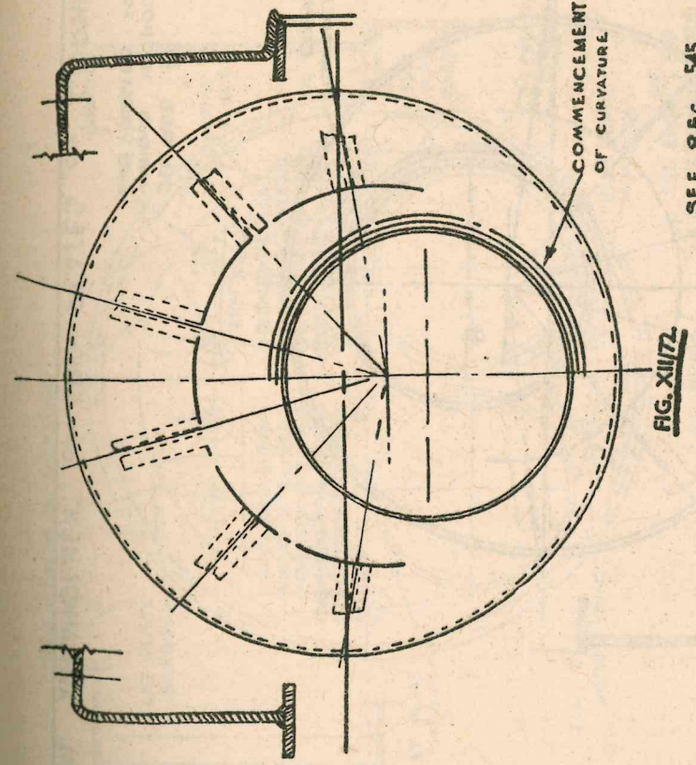

FIG. XII/72.

SEE REG. 545 FOR VARIOUS METHODS OF ATTACHMENT OF END PLATES TO SHELL AND FURNACES.

TYPICAL ARRANGEMENT OF END PLATES ON CORNISH BOILERS.

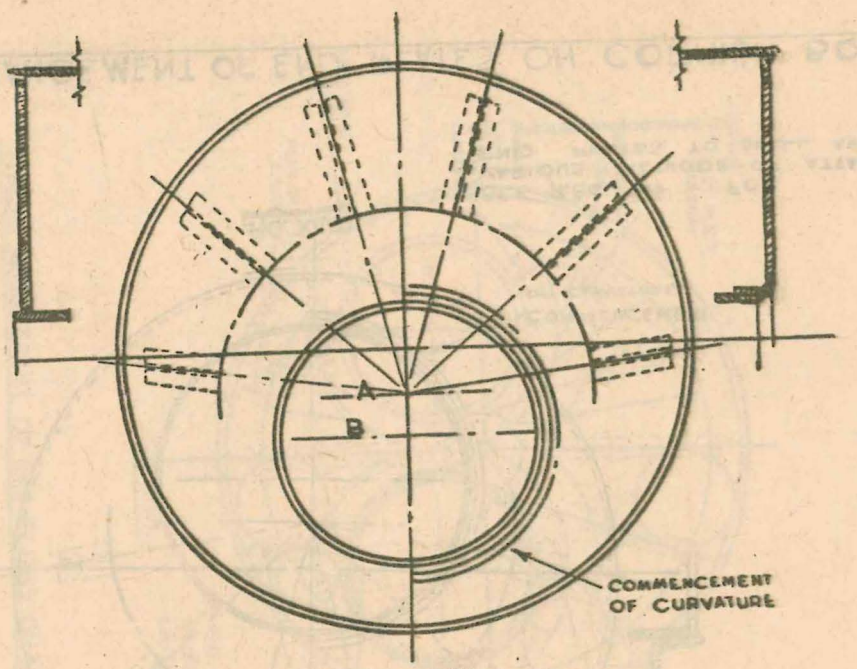

FIG. XII/73.

SEE REG 545 FOR VARIOUS METHODS OF ATTACHMENT OF END PLATES TO SHELL AND FURNACES.

TYPICAL ARRANGEMENT OF END PLATES ON CORNISH BOILERS.

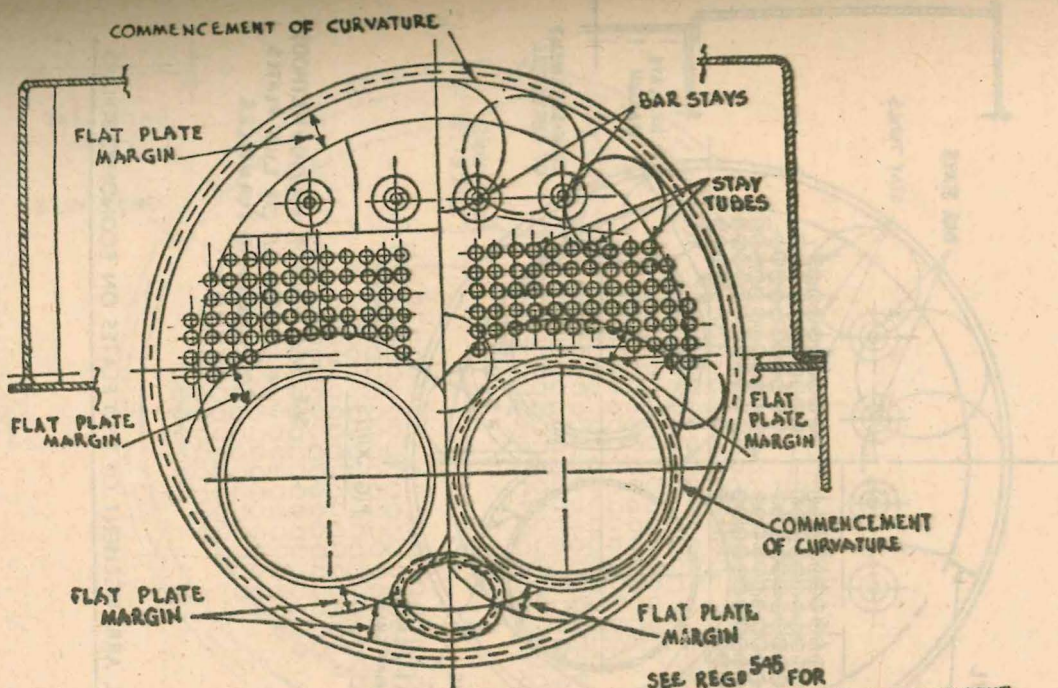

FIG. XII/74.

SEE REG 545 FOR VARIOUS METHODS OF ATTACHMENT OF END PLATES TO SHELL AND FURNACES

TYPICAL ARRANGEMENT OF END PLATES ON ECONOMIC BOILERS.

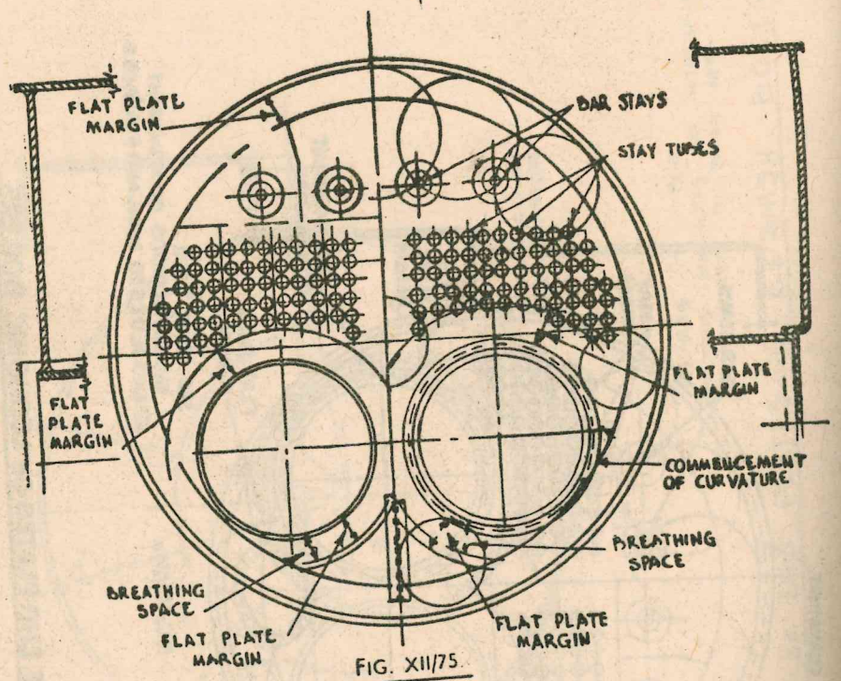

FIG. XII/75

SEE REG 545 FOR VARIOUS METHODS OF ATTACHMENT OF END PLATES TO SHELL AND FURNACES

TYPICAL ARRANGEMENT OF END PLATES ON ECONOMIC BOILERS

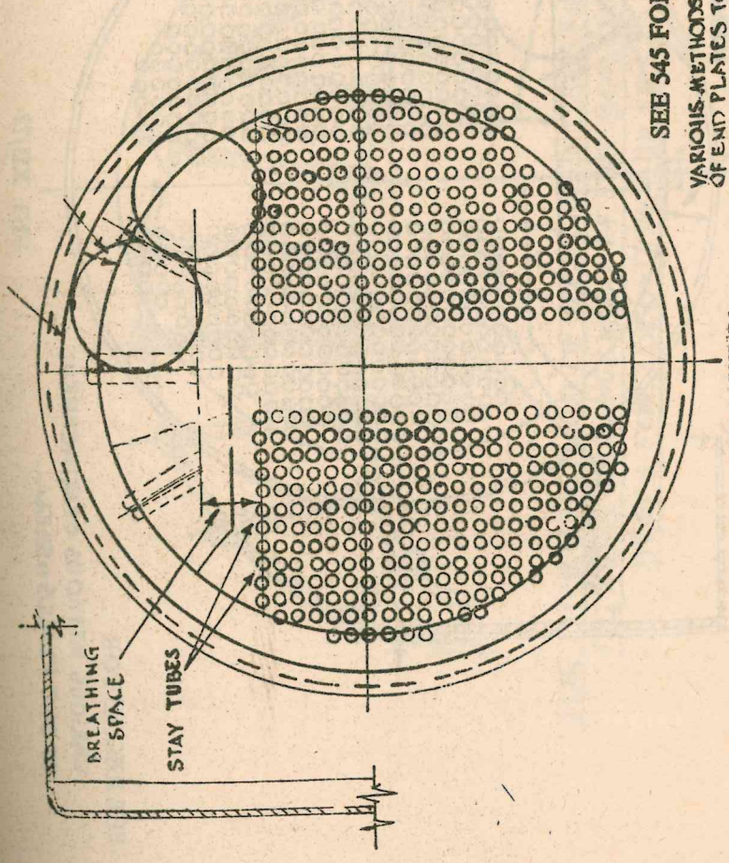

FIG. XII/76

SEE 545 FOR VARIOUS METHODS OF ATTACHMENT OF END PLATES TO SHELL.

TYPICAL ARRANGEMENT OF END PLATES ON MULTITUBULAR BOILERS.

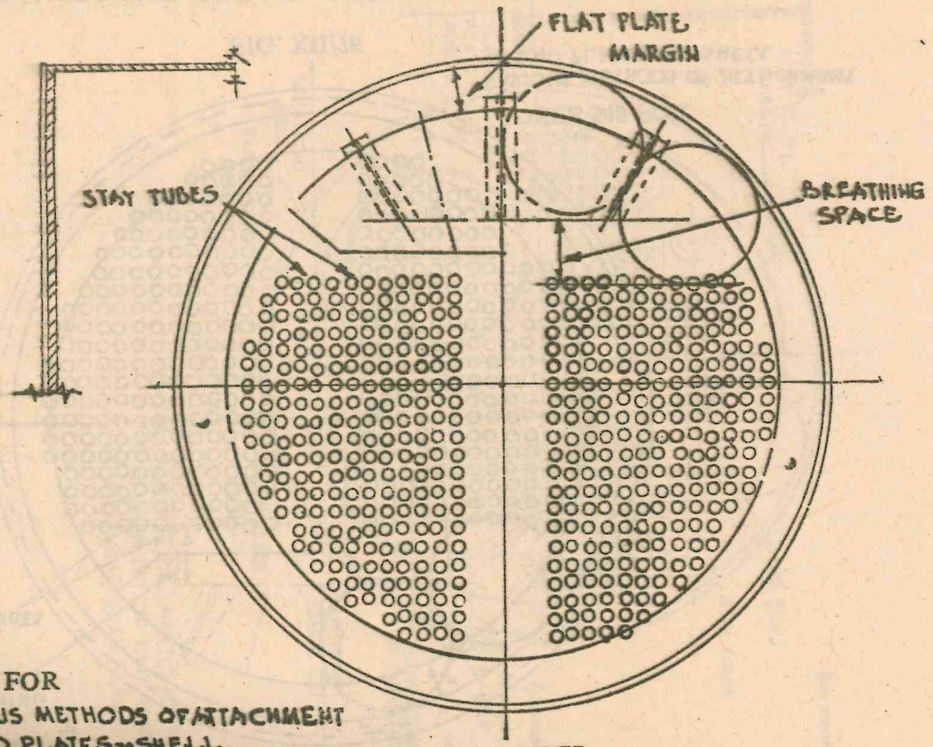

SEE REG. 45 FOR VARIOUS METHODS OF ATTACHMENT OF END PLATES TO SHELL.

FIG. XII/77

TYPICAL ARRANGEMENT OF END PLATES ON MULTITUBULAR BOILERS

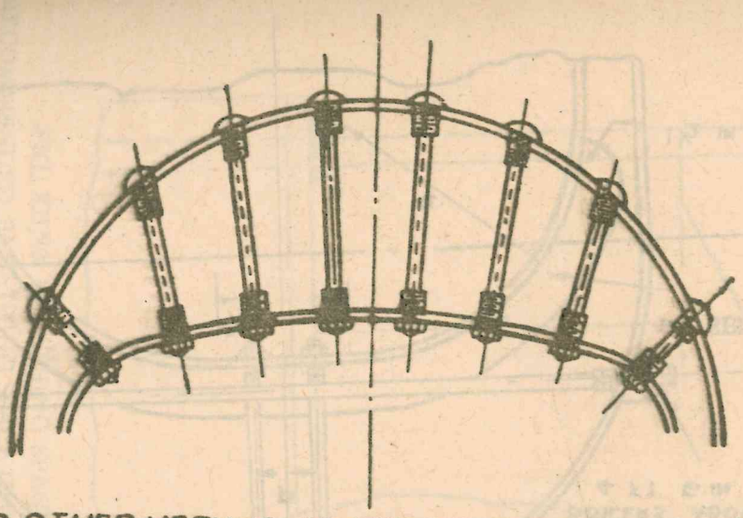

FOR OTHER METHOD OF ATTACHMENT SEE FIG XII/39,40&41.

FIG. XII/78. ARRANGEMENT OF FIRE BOX CROWN STAYS FOR LOCO-TYPE BOILERS.

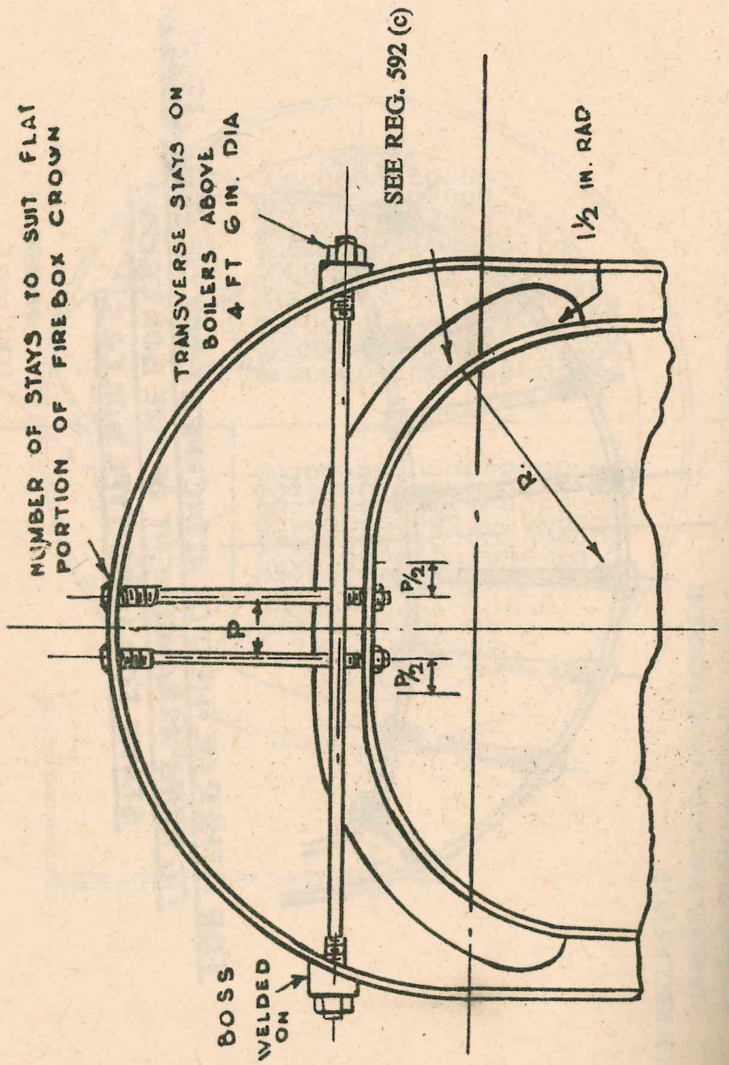

FIG. XII/79. ARRANGEMENT OF FIRE BOX CROWN AND TRANSVERSE STAYS FOR LOCO-TYPE BOILERS

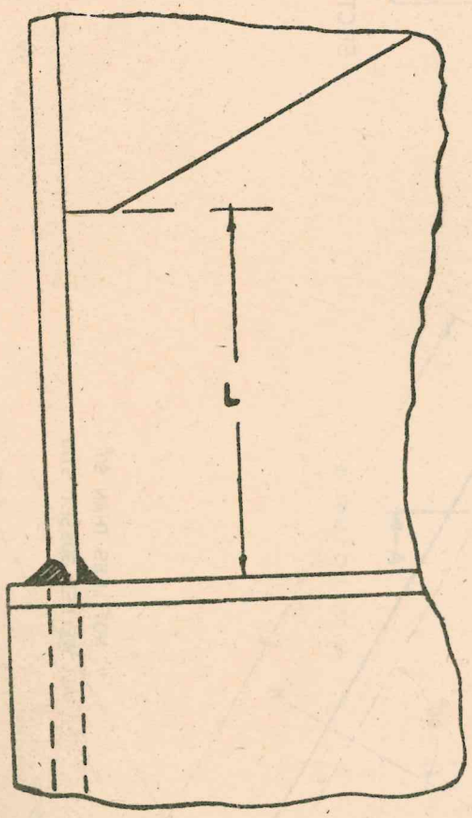

FIG. XII/80. BREATHING SPACE
(SEE RECOMMENDED BREATHING SPACE GIVEN IN REG. 590).
NOTE:—THIS SKETCH IS DIAGRAMATIC ONLY

134/2/M. of Industry/69-70-26

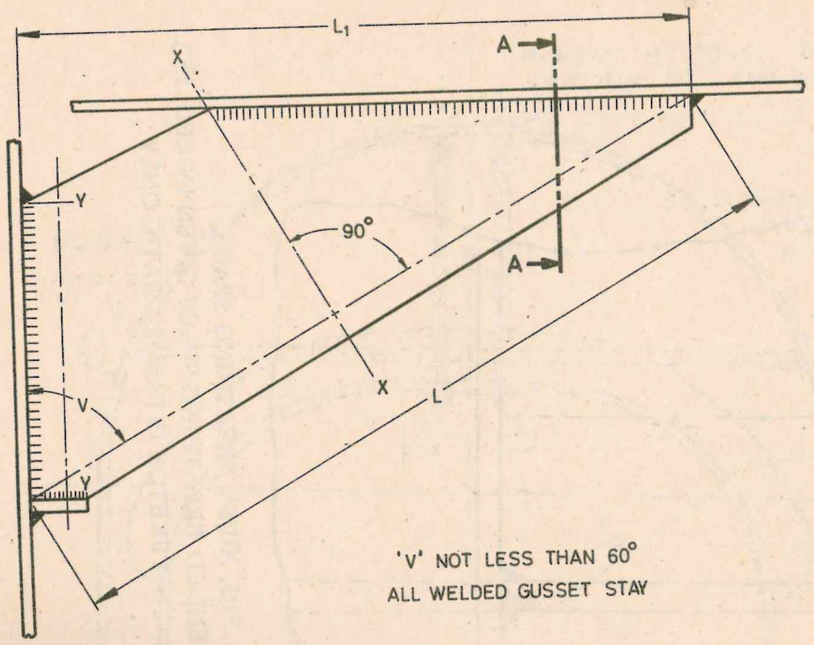

'V' NOT LESS THAN 60°
ALL WELDED GUSSET STAY

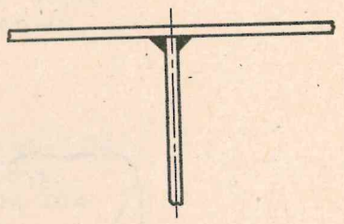

SECTION A A

FIG. XII/81 TYPICAL DETAILS FOR ALL WELDED GUSSET STAY

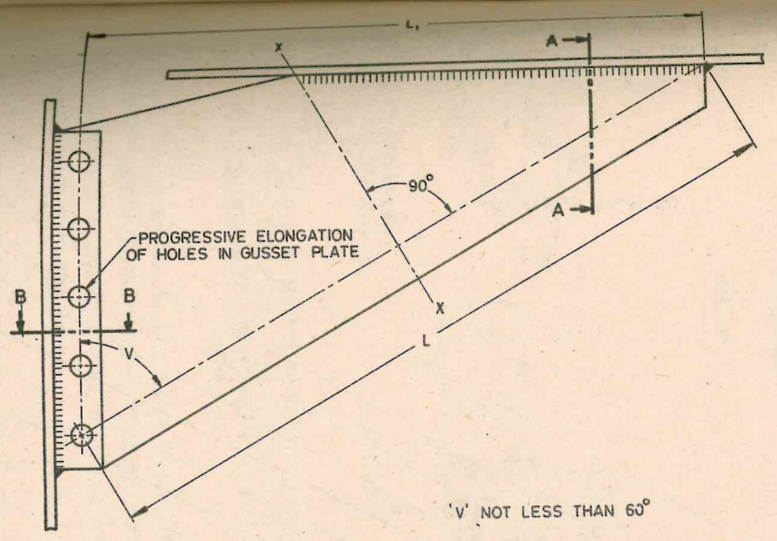

'V' NOT LESS THAN 60°

WELDED AND PINNED GUSSET STAY

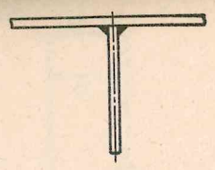

SECTION AA

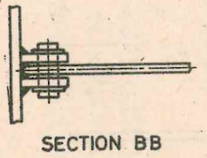

SECTION BB

FIG. XII/82 TYPICAL DETAILS FOR WELDED AND PINNED GUSSET STAY

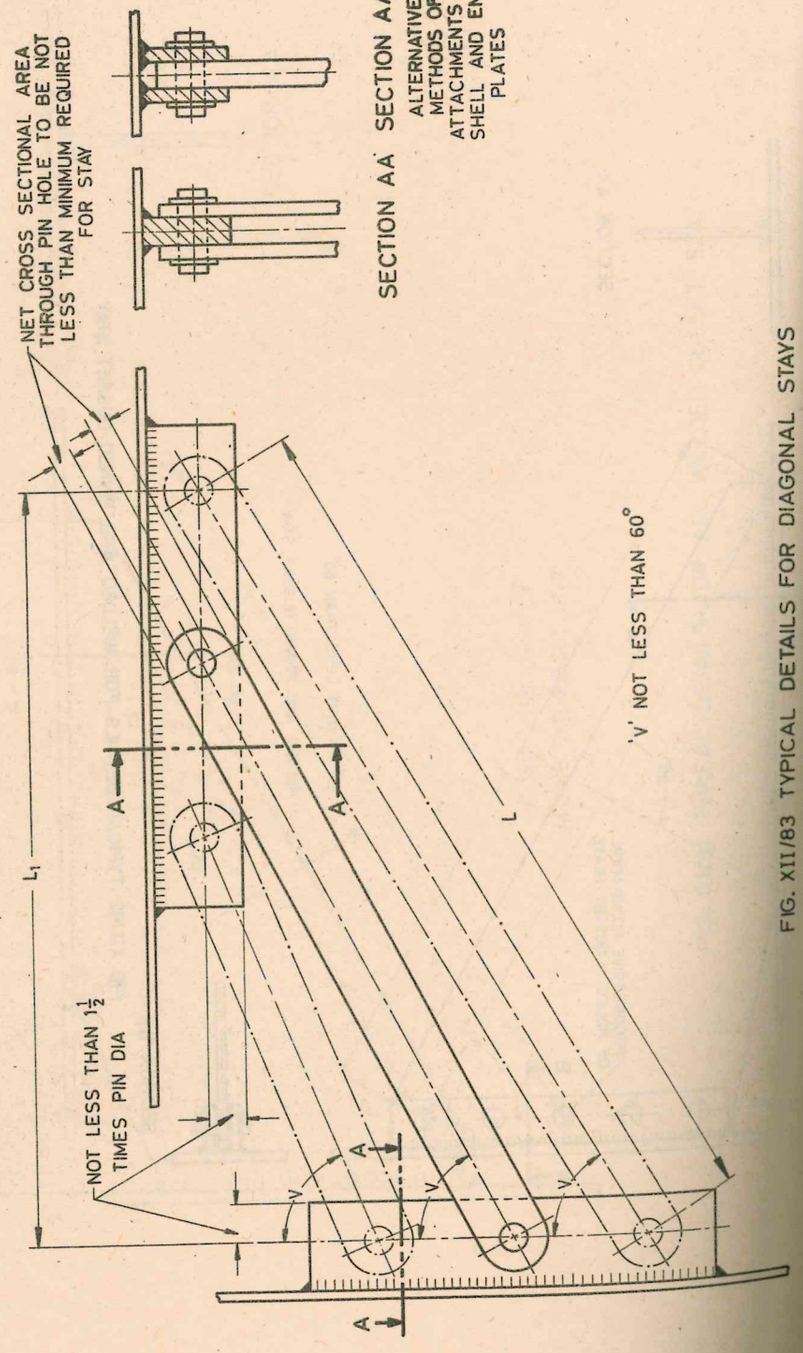

FIG. XII/83 TYPICAL DETAILS FOR DIAGONAL STAYS
(CHAIN LINES INDICATE STAY WITH MULTIPLE LINKS)

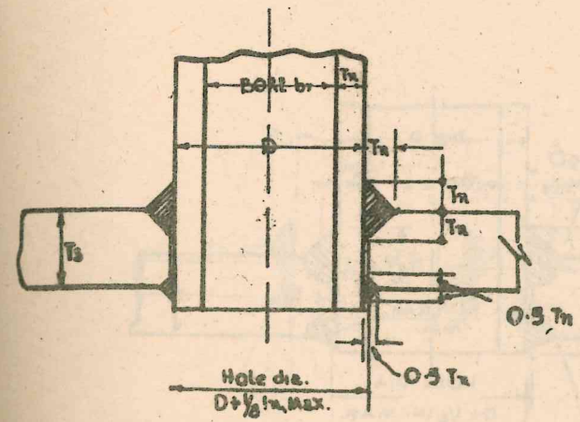

FIG. A.

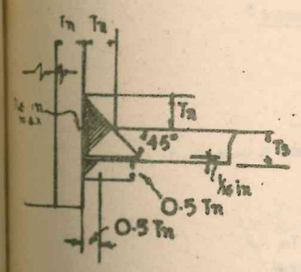

MINIMUM WELD DIMENSIONS WHERE PLATE THICKNESS Ts IS LESS THAN 1·5 Tn

FIG. C

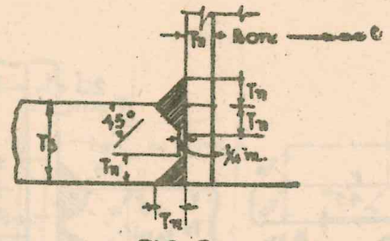

FIG. B.

FIG. XII/84. MINIMUM WELD ATTACHMENT FOR STAND-PIPES UP TO AND INCLUDING 5 IN. BORE NOT REQUIRING COMPENSATING PLATES

NOTE:- THE TYPES IN 'A' AND 'B' ARE ONLY PERMITTED WHERE THE ELECTRODES AND TECHNIQUE TO BE USED HAVE BEEN SHOWN BY SEPERATELY PREPARED TEST SPECIMENS TO GIVE FULL PENETRATION WITH SOUND WELD METAL THE ROOT OF THE GROOVES.

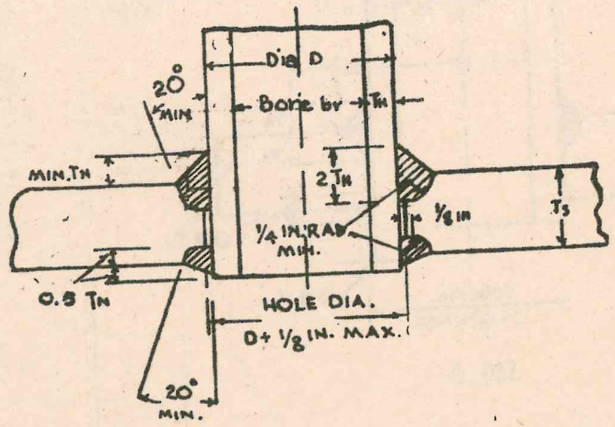

FIG. A.

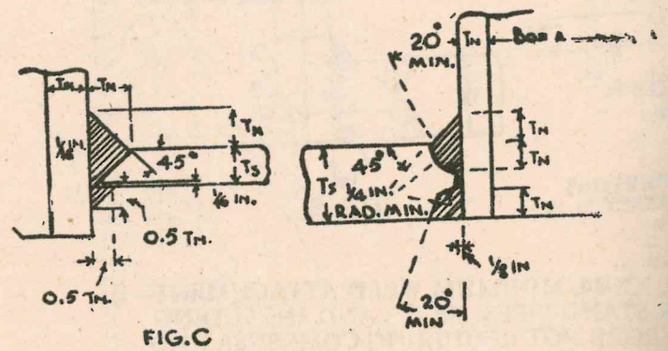

FIG.C

MINIMUM WELD DIMENSIONS WHERE PLATE THICKNESS Ts IS LESS THAN 1.5 Tн.

FIG B

FIG. XII/85. MINIMUM WELD ATTACHMENTS FOR STAND-PIPES OVER 5 BORE NOT REQUIRING COMPENSATING PLATES.

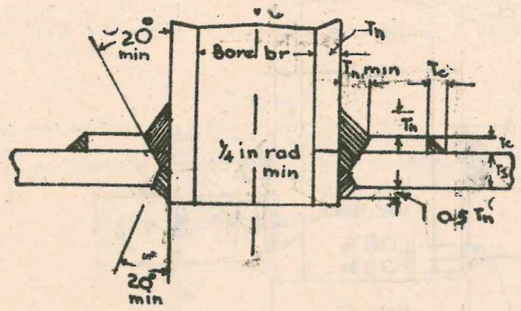

FIG. XII 86. MINIMUM WELD ATTACHMENT FOR STAND PIPES OVER 5" BORE REQUIRING COMPENSATION PLATES.

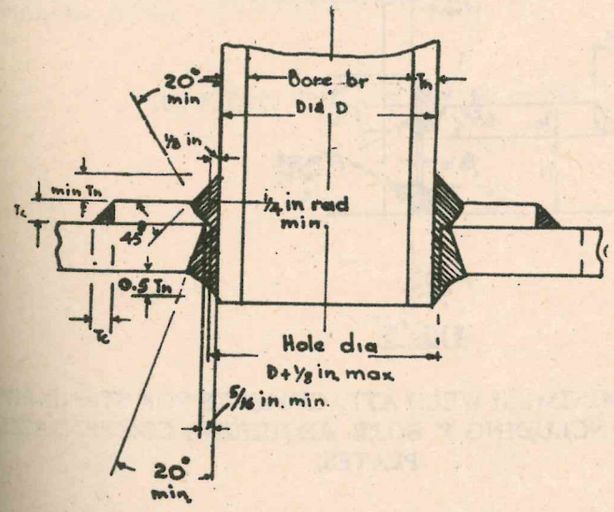

FIG. XII/87. MINIMUM WELD ATTACHMENT FOR STAND PIPES OVER 5" BORE REQUIRING COMPENSATION PLATES.

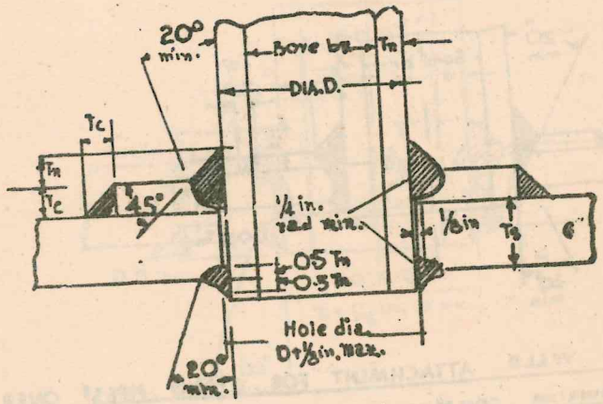

FIG 'A'

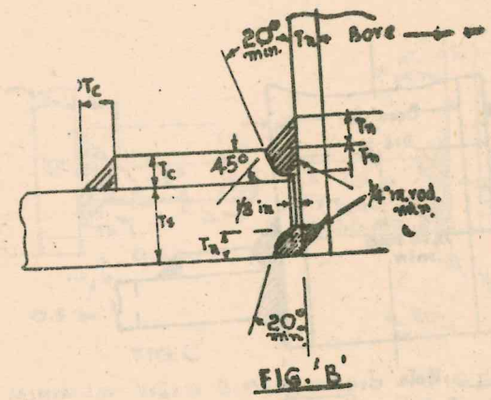

FIG. 'B'

FIG. XII/88. MINIMUM WELD ATTACHMENTS FOR STAND-PIPES UP TO AND INCLUDING 5" BORE REQUIRING COMPENSATION PLATES.

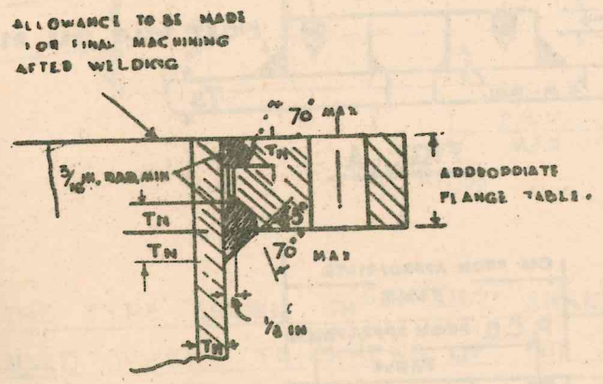

THE FLANGE SHALL NOT BE A TIGHT FIT ON TO THE PIPE. THE MAXIMUM CLEARANCE BETWEEN THE BORE OF THE FLANGE AND THE OUTSIDE DIAMETER OF THE PIPE SHALL BE ⅛ IN AT ANY POINT AND THE SUM OF THE CLEARANCES DIAMETRICALLY OPPOSITE SHALL NOT EXCEED 3/16 in.

FIG. XII/89. WELDED ON FLANGE

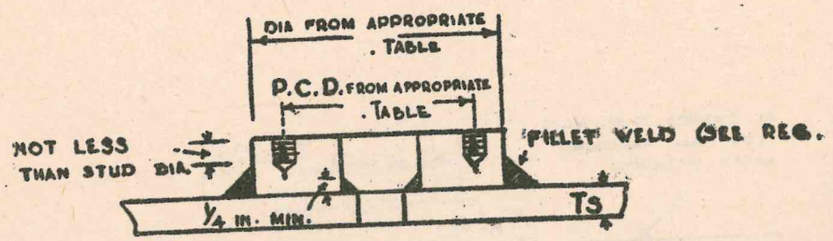

FIG. A

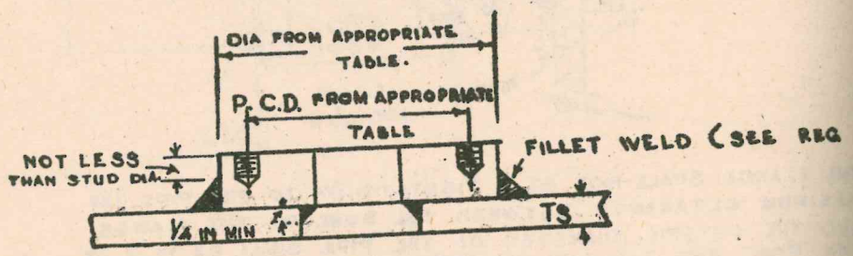

FIG. B

FIG. XII/90. PADS WELDED ON FOR STUDS

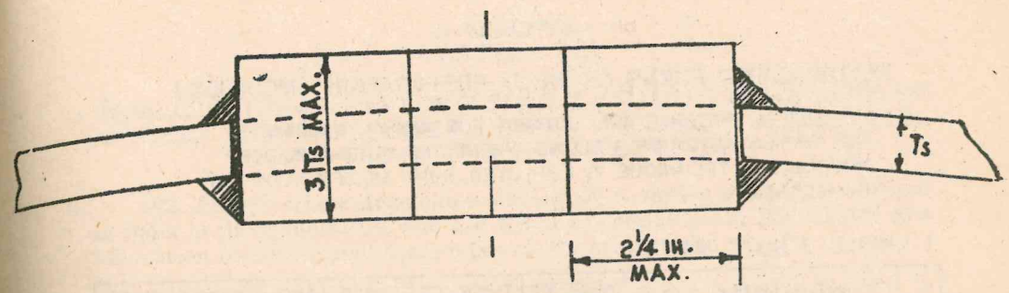

FIG. XII/91

THE TYPE SHOWN IN FIG. XII/91 SHALL NOT BE USED WHERE THICKNESS OF THE SHELL EXCEEDS ¾ IN.

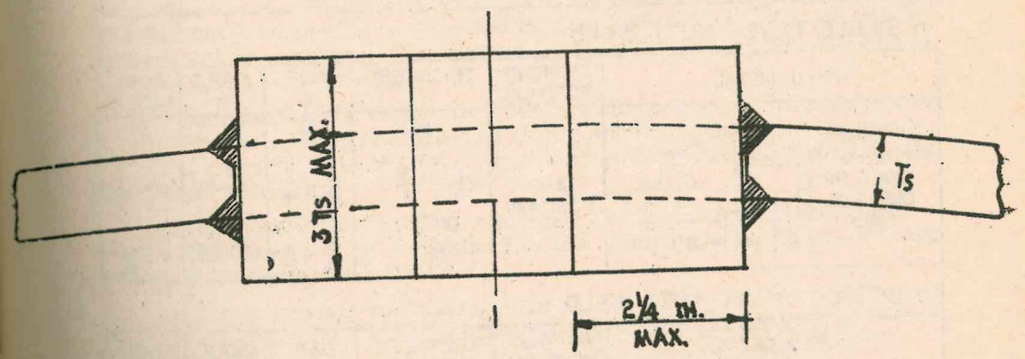

FIG. XII/92

THE TYPE SHOWN IN FIG. XII/92 TO BE USED WHEN SHELL THICKNESS EXCEEDS ¾ IN

APPENDIX A

RECOMMENDED FORMS OF WELD PREPARATION (MODIFIED)

DETAILS l–p INCLUSIVE ARE SUITABLE FOR MANUAL WELDING AND NORMAL AUTOMATIC WELDING WHERE THE AUTOMATIC DEEP PENETRATION TECHNIQUE IS EMPLOYED, SOME MODIFICATION MAY BE NECESSARY.

l SINGLE J BUTT WELD

WELD DETAIL		WELDING POSITION	THICKNESS T	GAP G*	ANGLE α*	RADIUS r	ROOT FACE R
WELDED FROM BOTH SIDES OR ONE SIDE ONLY		ALL POSITION	IN OVER $\frac{1}{2}$	IN $0-\frac{1}{8}$	$10^\circ-20^\circ$	IN $\frac{3}{16}-\frac{3}{8}$	IN $\frac{1}{16}-\frac{1}{8}$

m DOUBLE J BUTT WELD

WELD DETAIL		WELDING POSITION	THICKNESS T	GAP G*	ANGLE α*	RADIUS r	ROOT FACE R
WELDED FROM BOTH SIDES		ALL POSITIONS	IN OVER 1	IN $0-\frac{1}{8}$	$10^\circ-20^\circ$	IN $\frac{3}{16}-\frac{3}{8}$	IN $\frac{1}{16}-\frac{1}{8}$

n SINGLE BEVEL BUTT WELD

WELD DETAIL		WELDING POSITION	THICKNESS T	GAP G	ANGLE α	ROOT FACE R
WELDED FROM BOTH SIDES OR ONE SIDE ONLY		ALL POSITION	IN $\frac{3}{16}-\frac{3}{8}$ OVER $\frac{3}{8}$	IN $\frac{1}{8}-\frac{3}{16}$ $\frac{3}{16}-\frac{5}{16}$	$45^\circ-50^\circ$ $45^\circ-50^\circ$	IN $0-\frac{1}{16}$ $0-\frac{1}{16}$

p DOUBLE BEVEL BUTT WELD

WELD DETAIL		WELDING POSITION	THICKNESS T	GAP G	ANGLE α	ROOT FACE R
WELDED			IN	IN		IN